Self Diagnosis Supported model

SERVICE MANUAL

BA-5 CHASSIS

MODEL NAME	REMOTE COMMANDER	DESTINATION	CHASSIS NO.
KV-27FS12	RM-Y168	US	SCC-S40D-A
KV-27FS12	RM-Y168	CND	SCC-S41D-A
KV-27FS16	RM-Y169	US	SCC-S40E-A
KV-29FS12	RM-Y168	E	SCC-S38K-A
KV-29FS12C	RM-Y168	E	SCC-S38L-A

KV-27FS16

RM-Y168

TRINITRON® COLOR TELEVISION

SONY®

9-965-882--04

Downloaded from www.Manualslib.com manuals search engine

SPECIFICATIONS

		KV-27FS12	KV-27FS16	KV-29FS12	KV-29FS12C
Power requirements		120V, 60Hz	120V, 60Hz	120V/220V, 60Hz/50Hz	120V/220V, 60Hz/50Hz
Number of inputs/outputs					
	Video 1)	3	3	3	3
	S Video 2)	1	1	1	1
	Audio 3)	3	3	3	3
	Audio Out 4)	1	1	1	1
	Y, P_B, P_R 5)	1	1	1	1
Speaker output(W)		5Wx2	5Wx2	10Wx2	10Wx2
Power Consumption(W)					
	In use(Max)	160W	170W	185W	185W
	In standby	1W	1W	1W	1W
Dimensions(W/H/D)					
	(mm)	700 x 632 x 512 mm.	700 x 632 x 512 mm.	700 x 632 x 512 mm.	700 x 632 x 512 mm.
	(in)	27 1/2 x 24 7/8 x 20 1/6 in.	27 1/2 x 24 7/8 x 20 1/6 in.	27 1/2 x 24 7/8 x 20 1/6 in.	27 1/2 x 24 7/8 x 20 1/6 in.
Mass					
	(kg)	47kg	47kg	47kg	47kg
	(lbs)	103 lbs. 10 oz.	103 lbs. 10 oz.	103 lbs. 10 oz.	103 lbs. 10 oz.

1) 1 Vp-p 75 ohms unbalanced, sync negative
2) Y: 1 Vp-p 75 ohms unbalanced, sync negative
   C: 0.286 Vp-p (Burst signal), 75 ohms
3) 500mVrms (100% modulation), impedance: 47kilohms
4) More than 408 mVrms at the maximum volume setting (variable)
   More than 408 mVrms (fix)
5) Y: 1.0 Vp-p, 75 ohms, sync negative; P_B: 0.7 Vp-p, 75 ohms;
   P_R: Vp-p, 75 ohms

Television system

American TV standard/NTSC

Channel coverage

VHF:2-13/UHF:14-69/CATV:1-125

Visible screen size

27” picture measured diagonally

Actual screen size

29” picture measured diagonally

Antenna

75 ohm external antenna terminal for VHF/UHF

Supplied accessories

Remote Commander RM-Y168 (ALL EXCEPT KV-27FS16)
Remote Commander RM-Y169 (KV-27FS16 ONLY)
Size AA (R6) batteries (2)

Optional accessories

Connecting cables: VMC-810S/820S, VMC-720M,
YC-15V/30V, RK74A
U/V mixer EAC-66
TV Stand: SU27FD3

Design and specifications are subject to change without notice.

Downloaded from www.Manualslib.com manuals search engine

TABLE OF CONTENTS

Section	Title	Page
	Warnings and Cautions	4
	Self-Diagnostic Function	4
	Safety Check-Out Instructions	7
1.	**GENERAL**	8
2.	**DISASSEMBLY**	
2-1.	Rear Cover Removal	14
2-2.	Chassis Assembly Removal	14
2-3.	Service Position	14
2-4.	Picture Tube Removal	15
3.	**SET-UP ADJUSTMENTS**	
3-1.	Beam Landing	16
3-2.	Convergence	17
3-3.	Focus	18
3-4.	Screen (G2)	19
3-5.	Method of Setting the Service Adjustment Mode	19
3-6.	White Balance Adjustments	19
4.	**SAFETY RELATED ADJUSTMENTS**	
4-1.	⋈ R564 Confirmation Method (HV Hold-Down Confirmation and Readjustments)	20
4-2.	B+ Voltage Confirmation and Adjustment	20
5.	**CIRCUIT ADJUSTMENTS**	
5-1.	Setting the Service Adjustment Mode	22
5-2.	Memory Write Confirmation Method	22
5-3.	Adjustment Buttons and Indicators	22
5-4.	MA Board Adjustments	25
6.	**DIAGRAMS**	
6-1.	Block Diagram	31
6-2.	Circuit Board Location	35
6-3.	Printed Wiring Boards and Schematic Diagrams	35
	• A Board	36
	• MA Board	43
	• CA Board	49
	• HX Board	50
	• D Board	51
	• K Board	53
	• VA Board	54
	• P Board	55
6-4.	Semiconductors	57
7.	**EXPLODED VIEW**	
7-1.	Chassis (KV-27FS16/27FS12 ONLY)	58
7-2.	Chassis (KV-29FS12/29FS12C ONLY)	59
8.	**ELECTRICAL PARTS LIST**	60

Downloaded from www.Manualslib.com manuals search engine

WARNINGS AND CAUTIONS

CAUTION

SHORT CIRCUIT THE ANODE OF THE PICTURE TUBE AND THE ANODE CAP TO THE METAL CHASSIS, CRT SHIELD, OR CARBON PAINTED ON THE CRT, AFTER REMOVING THE ANODE.

WARNING!!

AN ISOLATION TRANSFORMER SHOULD BE USED DURING ANY SERVICE TO AVOID POSSIBLE SHOCK HAZARD, BECAUSE OF LIVE CHASSIS. THE CHASSIS OF THIS RECEIVER IS DIRECTLY CONNECTED TO THE AC POWER LINE.

SAFETY-RELATED COMPONENT WARNING!!

COMPONENTS IDENTIFIED BY SHADING AND MARK ⚠ ON THE SCHEMATIC DIAGRAMS, EXPLODED VIEWS, AND IN THE PARTS LIST ARE CRITICAL FOR SAFE OPERATION. REPLACE THESE COMPONENTS WITH SONY PARTS WHOSE PART NUMBERS APPEAR AS SHOWN IN THIS MANUAL OR IN SUPPLEMENTS PUBLISHED BY SONY. CIRCUIT ADJUSTMENTS THAT ARE CRITICAL FOR SAFE OPERATION ARE IDENTIFIED IN THIS MANUAL. FOLLOW THESE PROCEDURES WHENEVER CRITICAL COMPONENTS ARE REPLACED OR IMPROPER OPERATION IS SUSPECTED.

ATTENTION!!

APRES AVOIR DECONNECTE LE CAP DE L'ANODE, COURT-CIRCUITER L'ANODE DU TUBE CATHODIQUE ET CELUI DE L'ANODE DU CAP AU CHASSIS METALLIQUE DE L'APPAREIL, OU AU COUCHE DE CARBONE PEINTE SUR LE TUBE CATHODIQUE OU AU BLINDAGE DU TUBE CATHODIQUE.

ATTENTION!!

AFIN D'EVITER TOUT RESQUE D'ELECTROCUTION PROVENANT D'UN CHÁSSIS SOUS TENSION, UN TRANSFORMATEUR D'ISOLEMENT DOIT ETRE UTILISÉ LORS DE TOUT DÉPANNAGE. LE CHÁSSIS DE CE RÉCEPTEUR EST DIRECTEMENT RACCORDÉ À L'ALIMENTATION SECTEUR.

ATTENTION AUX COMPOSANTS RELATIFS A LA SECURITE!!

LES COMPOSANTS IDENTIFIES PAR UNE TRAME ET PAR UNE MARQUE ⚠ SUR LES SCHEMAS DE PRINCIPE, LES VUES EXPLOSEES ET LES LISTES DE PIECES SONT D'UNEIMPORTANCE CRITIQUE POUR LA SECURITE DU FONCTIONNEMENT. NE LES REMPLACER QUE PAR DES COMPOSANTS SONY DONT LE NUMERO DE PIECE EST INDIQUE DANS LE PRESENT MANUEL OU DANS DES SUPPLEMENTS PUBLIES PAR SONY. LES REGLAGES DE CIRCUIT DONT L'IMPORTANCE EST CRITIQUE POUR LA SECURITE DU FONCTIONNEMENT SONT IDENTIFIES DANS LE PRESENT MANUEL. SUIVRE CES PROCEDURES LORS DE CHAQUE REMPLACEMENT DE COMPOSANTS CRITIQUES, OU LORSQU'UN MAUVAIS FONTIONNEMENT SUSPECTE.

SELF-DIAGNOSTIC FUNCTION

The units in this manual contain a self-diagnostic function. If an error occurs, the STANDBY/TIMER LED will automatically begin to flash. The number of times the LED flashes translates to a probable source of the problem. A definition of the STANDBY/TIMER LED flash indicators is listed in the instruction manual for the user's knowledge and reference. If an error symptom cannot be reproduced, the Remote Commander can be used to review the failure occurrence data stored in memory to reveal past problems and how often these problems occur.

Diagnostic Test Indicators

When an error occurs, the STANDBY/TIMER LED will flash a set number of times to indicate the possible cause of the problem. If there is more than one error, the LED will identify the first of the problem areas.

Results for all of the following diagnostic items are displayed on screen. No error has occurred if the screen displays a "0".

Diagnostic Item Description	No. of Times STANDBY/TIMER LED Flashes	Self-Diagnostic Display/ Diagnostic Result	Probable Cause Location	Detected Symptoms
Power does not turn on	Does not light	———	• Power cord is not plugged in. • Fuse is burned out. (F601) (A Board)	• Power does not come on. • No power is supplied to the TV. • AC power supply is faulty.
+B overcurrent (OCP)*	2 times	2:0 or 2:1	• H.OUT (Q502) is shorted. (A Board) • IC702 is shorted. (CA Board)	• Power does not come on. • Load on power line is shorted.
I-Prot	4 times	4:0 or 4:1	• +13V is not supplied. (A Board) • IC502 is faulty. (A Board)	• Has entered standby state after horizontal raster. • Vertical deflection pulse is stopped. • Power line is shorted or power supply is stopped.
IK	5 times	5:0 or 5:1	• Video OUT (IC502) is faulty. (A Board) • IC301 is faulty. (MA Board) • Screen (G2) is improperly adjusted.**	• No raster is generated. • CRT cathode current detection reference pulse output is small.

* If a +B overcurrent is detected, stoppage of the vertical deflection is detected simultaneously. The symptom that is diagnosed first by the microcontroller is displayed on the screen.

** Refer to Screen (G2) Adjustments in Section 3-4 of this manual.

Downloaded from www.Manualslib.com manuals search engine

Display of Standby/Timer LED Flash Count

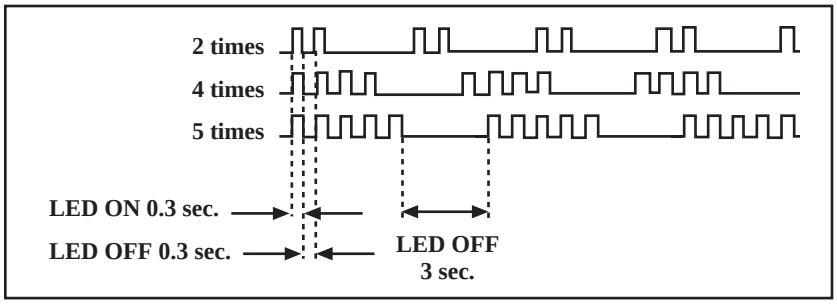

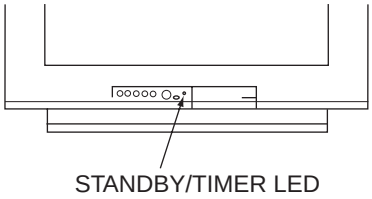

Diagnostic Item	Flash Count*
+B overcurrent	2 times
I-Prot	4 times
IK	5 times

*One flash count is not used for self-diagnostic.

Stopping the Standby/Timer LED Flash

Turn off the power switch on the TV main unit or unplug the power cord from the outlet to stop the STANDBY/TIMER LAMP from flashing.

Self-Diagnostic Screen Display

For errors with symptoms such as “power sometimes shuts off” or “screen sometimes goes out” that cannot be confirmed, it is possible to bring up past occurrences of failure on the screen for confirmation.

To Bring Up Screen Test

In standby mode, press buttons on the Remote Commander sequentially, in rapid succession, as shown below:

Display ➡ Channel 5 ➡ Sound volume − ➡ Power ON

⇧

Note that this differs from entering the service mode (sound volume +).

Self-Diagnostic Screen Display

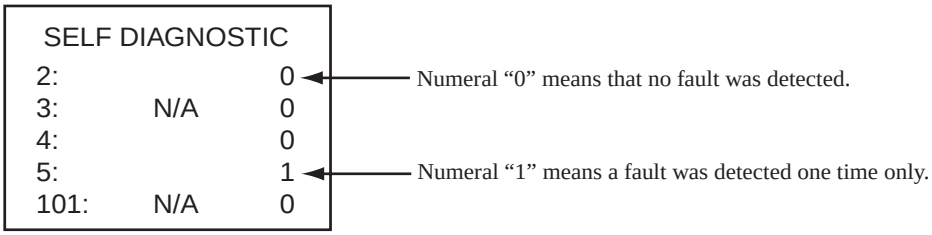

Downloaded from www.Manualslib.com manuals search engine

Handling of Self-Diagnostic Screen Display

Since the diagnostic results displayed on the screen are not automatically cleared, always check the self-diagnostic screen during repairs. When you have completed the repairs, clear the result display to “0”.

Unless the result display is cleared to “0”, the self-diagnostic function will not be able to detect subsequent faults after completion of the repairs.

Clearing the Result Display

To clear the result display to “0”, press buttons on the Remote Commander sequentially when the diagnostic screen is displayed, as shown below:

Channel [8] ➡ [ENTER]

Quitting the Self-Diagnostic Screen

To quit the entire self-diagnostic screen, turn off the power switch on the Remote Commander or the main unit.

Self-Diagnostic Circuit

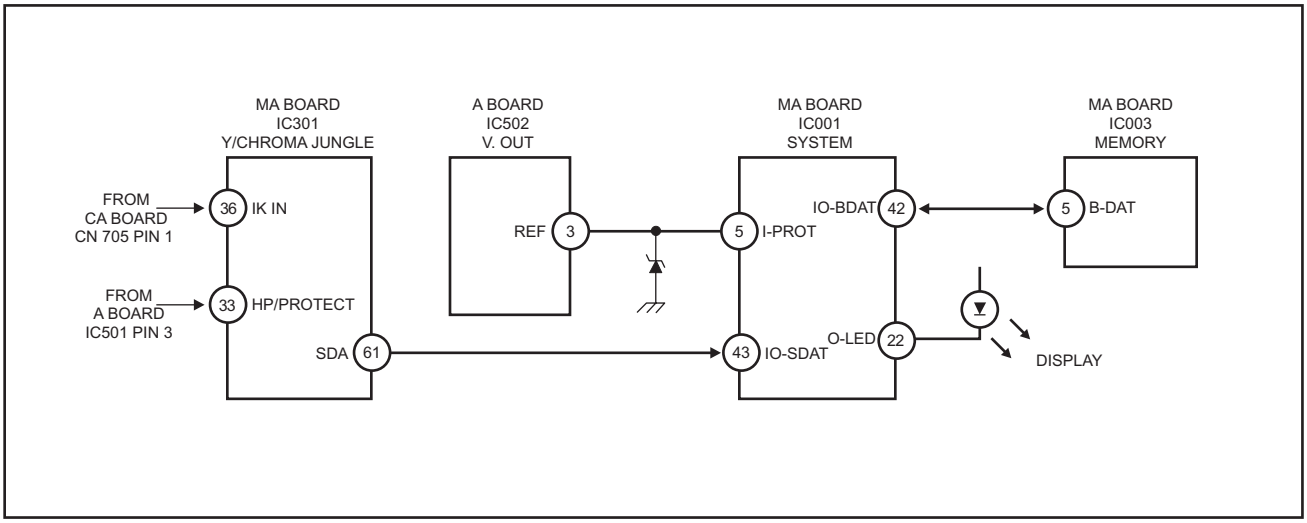

+B overcurrent (OCP)

Occurs when an overcurrent on the +B (135V) line is detected by pin 33 of IC301 (MA Board). If the voltage of pin 33 of IC301 (MA Board) is less than 1V when V.SYNC is more than seven verticals in a period, the unit will automatically turn off.

I-Prot

Occurs when an absence of the vertical deflection pulse is detected by pin 5 of IC001 (MA Board). Power supply will shut down when waveform interval exceeds 2 seconds.

IK

If the RGB levels* do not balance within 2 seconds after the power is turned on, this error will be detected by IC301 (MA Board). TV will stay on, but there will be no picture.

*(Refers to the RGB levels of the AKB detection Ref pulse that detects 1K).

Downloaded from www.Manualslib.com manuals search engine

SAFETY CHECK-OUT

After correcting the original service problem, perform the following safety checks before releasing the set to the customer:

1. Check the area of your repair for unsoldered or poorly soldered connections. Check the entire board surface for solder splashes and bridges.
2. Check the interboard wiring to ensure that no wires are “pinched” or touching high-wattage resistors.
3. Check that all control knobs, shields, covers, ground straps, and mounting hardware have been replaced. Be absolutely certain that you have replaced all the insulators.
4. Look for unauthorized replacement parts, particularly transistors, that were installed during a previous repair. Point them out to the customer and recommend their replacement.
5. Look for parts which, though functioning, show obvious signs of deterioration. Point them out to the customer and recommend their replacement.
6. Check the line cords for cracks and abrasion. Recommend the replacement of any such line cord to the customer.
7. Check the B+ and HV to see if they are specified values. Make sure your instruments are accurate; be suspicious of your HV meter if sets always have low HV.
8. Check the antenna terminals, metal trim, “metallized” knobs, screws, and all other exposed metal parts for AC leakage. Check leakage as described below.

Leakage Test

The AC leakage from any exposed metal part to earth ground and from all exposed metal parts to any exposed metal part having a return to chassis, must not exceed 0.5 mA (500 microamperes). Leakage current can be measured by any one of three methods.

1. A commercial leakage tester, such as the Simpson 229 or RCA WT-540A. Follow the manufacturers' instructions to use these instructions.
2. A battery-operated AC milliammeter. The Data Precision 245 digital multimeter is suitable for this job.
3. Measuring the voltage drop across a resistor by means of a VOM or battery-operated AC voltmeter. The “limit” indication is 0.75 V, so analog meters must have an accurate low voltage scale. The Simpson’s 250 and Sanwa SH-63TRD are examples of passive VOMs that are suitable. Nearly all battery-operated digital multimeters that have a 2 VAC range are suitable (see Figure A).

How to Find a Good Earth Ground

A cold-water pipe is a guaranteed earth ground; the cover-plate retaining screw on most AC outlet boxes is also at earth ground. If the retaining screw is to be used as your earth ground, verify that it is at ground by measuring the resistance between it and a cold-water pipe with an ohmmeter. The reading should be zero ohms. If a cold-water pipe is not accessible, connect a 60- to 100-watt trouble- light (not a neon lamp) between the hot side of the receptacle and the retaining screw. Try both slots, if necessary, to locate the hot side on the line; the lamp should light at normal brilliance if the screw is at ground potential (see Figure B).

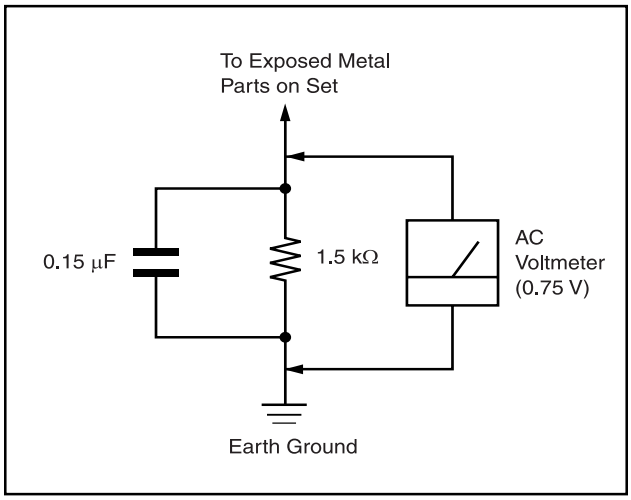

Figure A. Using an AC voltmeter to check AC leakage.

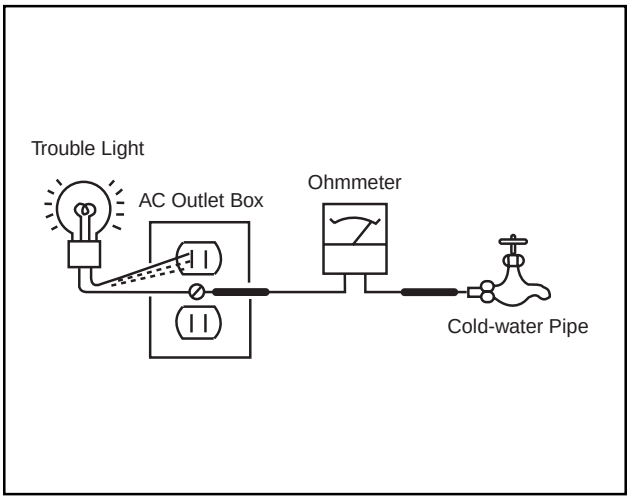

Figure B. Checking for earth ground.

Downloaded from www.Manualslib.com manuals search engine

The instructions mentioned here are partial abstracts from the Operating Instruction Manual.
The page numbers shown reflect those of the Operating Instruction Manual.

Connecting Your TV

Read this chapter before setting up your TV for the first time. This section covers basic connections in addition to any optional equipment you may be connecting.

Basic Connections

TV with indoor or outdoor antenna, or CATV cable

Depending on the cable available in your home, choose one of the connections below:

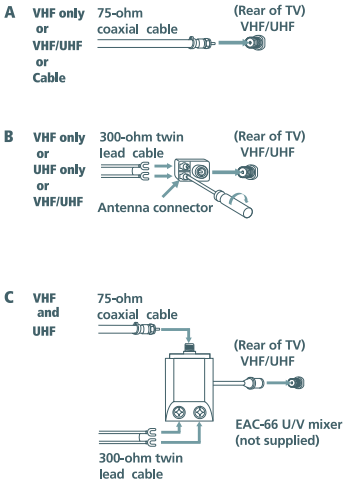

✍ If you are connecting to an indoor or outdoor antenna, you may need to adjust the orientation of the antenna for best reception.

Cable Box Connections

Some pay cable TV systems to use scrambled or encoded signals that require a cable box to view all channels.

Cable Box

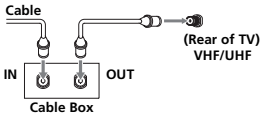

1 Connect the coaxial cable from your cable service to the IN jack on your cable box.

2 Connect a coaxial cable (not supplied) from the OUT jack on your cable box to the VHF/UHF jack on your TV.

✍ If you will be controlling all channel selection through your cable box, you should consider using the Channel Fix feature, (see page 26).

Cable Box and Cable

For this set up, you can switch between scramble channels (through your cable box), and normal (CATV) channels by using the ANT button.

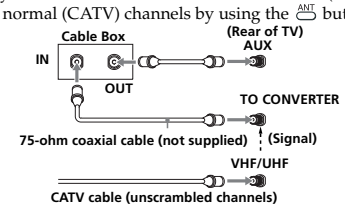

✍ If you are connecting a cable box through the AUX input and would like to switch between the AUX and normal (CATV) input, you should consider using the Channel Fix feature, (see page 26).

✍ Your Sony remote control can be programmed to operate your cable box, (see page 36).

✍ When using PIP, you cannot view the AUX input in the window picture.

Downloaded from www.Manualslib.com manuals search engine

Connecting Additional Equipment

TV and VCR

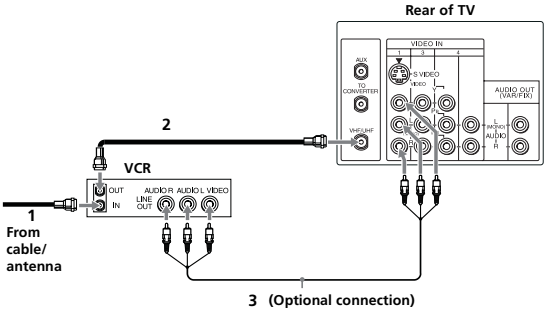

1 Connect the coaxial cable from your TV antenna or cable service to the IN jack on your VCR.

2 Connect a coaxial cable (not supplied) from the OUT jack on your VCR to the VHF/UHF jack on the TV.

✍ To watch video programs from your VCR, tune your TV to channel 3 or 4 (as set on the rear of your VCR).

(Optional connection)

3 If your VCR is equipped with video outputs, you can get better picture quality by connecting A/V cables (not supplied) from AUDIO and VIDEO OUT on your VCR to AUDIO/VIDEO IN on your TV.

✍ For optimum picture quality, use S VIDEO instead of the yellow A/V cable. S VIDEO does not provide sound, the audio cables must still be connected.

✍ You can use the TV/VIDEO button to switch between the VHF/UHF and VIDEO inputs.

TV and Cable Box

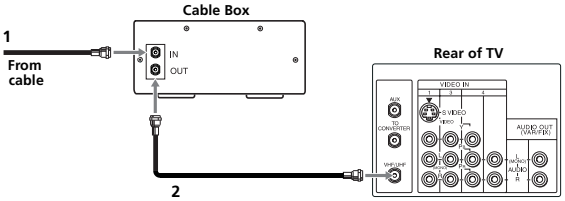

1 Connect the coaxial cable from your cable service to the IN jack on your cable box.

2 Connect a coaxial cable (not supplied) from the OUT jack on your cable box to the VHF/UHF jack on the TV.

✍ To view channels from your cable box, tune your TV to channel 3 or 4 (as set on the rear panel of your cable box) and use the cable box's remote control to change channels.

✍ If you will be controlling all channel selection through your cable box, you should consider using the Channel Fix feature, (see page 26).

Downloaded from www.Manualslib.com manuals search engine

TV, Cable box, and Cable

KV-27FS16, KV-27FV16, KV-32FS16, KV-29FV16 only

For this set up, you can switch between scrambled channels (through your cable box) and normal (CATV) channels by pressing ANT.

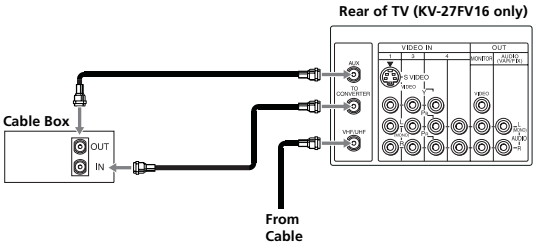

✍ When using PIP, the AUX input cannot be viewed in the window picture.

TV, VCR, and Cable box

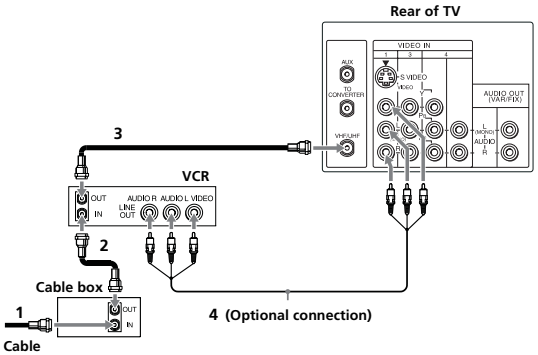

1 Connect the coaxial cable from your cable service to the IN jack on your cable box.

2 Connect a coaxial cable (not supplied) from the OUT jack on your cable box to the IN jack on your VCR.

3 Connect a coaxial cable (not supplied) from the OUT jack on your VCR to the VHF/UHF jack on the TV.

✍ If you will be controlling all channel selection through your cable box, you should consider using the Channel Fix feature, (see page 26).

(Optional connection)

4 If your VCR is equipped with video outputs, you can get better picture quality by connecting A/V cables (not supplied) from AUDIO and VIDEO OUT on your VCR to AUDIO/VIDEO IN on your TV.

✍ For optimum picture quality, use S VIDEO instead of the yellow A/V cable. S VIDEO does not provide sound, the audio cables must still be connected.

✍ You can use the TV/VIDEO button to switch between the VHF/UHF and VIDEO inputs.

Downloaded from www.Manualslib.com manuals search engine

TV and Satellite Receiver

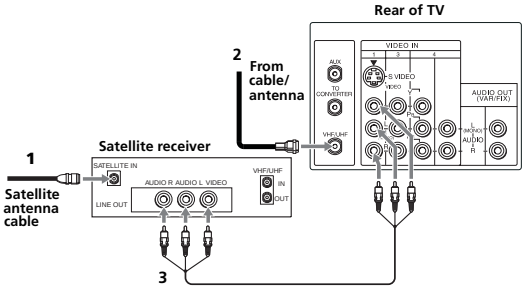

1 Connect the cable from your satellite antenna to SATELLITE IN on your satellite receiver.

2 Connect the coaxial cable from your cable or antenna to the VHF/UHF jack on your TV.

3 Using A/V cables, connect AUDIO and VIDEO OUT on your satellite receiver to AUDIO and VIDEO IN on your TV.

For optimum picture quality, use S VIDEO instead of the yellow A/V cable. S VIDEO does not provide sound, the audio cables must still be connected.

You can use the TV/VIDEO button to switch between the VHF/UHF and satellite receiver inputs.

TV, Satellite Receiver, and VCR

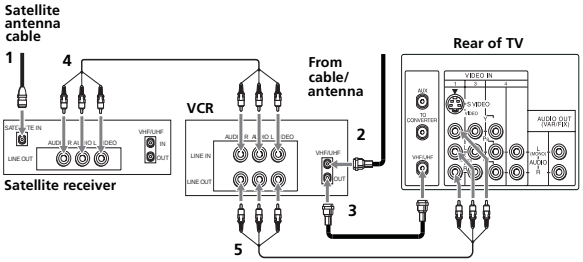

1 Connect the cable from your satellite antenna to SATELLITE IN on your satellite receiver.

2 Connect the coaxial cable from your cable or antenna to the IN jack on your VCR.

3 Using a coaxial cable, connect the OUT jack on your VCR to the VHF/UHF jack on your TV.

4 Using A/V cables, connect AUDIO and VIDEO OUT on your satellite receiver to AUDIO and VIDEO IN on your VCR.

5 Using A/V cables, connect AUDIO and VIDEO OUT on your VCR to AUDIO and VIDEO IN on your TV.

To view from the satellite receiver or VCR, select the video input to which your satellite receiver or VCR is connected by pressing TV/VIDEO on the remote control.

Downloaded from www.Manualslib.com manuals search engine

Using the Remote Control and Basic Functions

This section shows you how to use the more advanced buttons on the remote control and how to use the on-screen menus.

Using the Remote Control

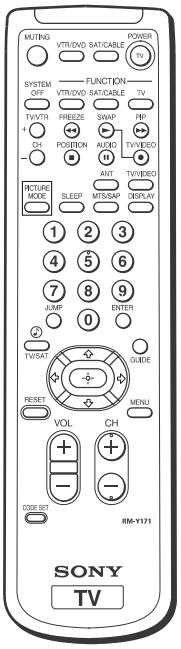

Button	Description
POWER	Press when you want to turn connected equipment on and off.
FUNCTION	Press when you want to control connected equipment with your remote control.
MUTING	Instantly turns off the sound. Press again or press VOL + to restore sound.
SYSTEM OFF	Powers off all Sony equipment at once, (may not work with older equipment).
TV/VIDEO	Cycles through available video inputs.
ANT	Press to change the VHF/UHF input to the AUX input (KV-27FS16, KV-27FV16, KV-32FS16 only).
TV/VTR	Press when you are finished using a VCR and you want to switch to the TV input. Your VCR power will remain on.
	Moves the cursor in the on-screen menus. Press the arrow buttons to move the cursor. Press the center button to select or access an option.
PICTURE MODE	Cycles through the available Video Mode settings.

✍ The remote control shown (RM-Y171) is for KV-27FV16. Your remote control may not look like the one illustrated.

SLEEP	Turns the TV off automatically in approximately 15, 30, 45, 60, 90, or 120 minutes. Cancel by pressing until SLEEP OFF appears.
MTS/SAP	Cycles through the Multi-channel TV Sound (MTS) options: Stereo, Mono, and Auto-SAP (Second Audio Programming).
DISPLAY	Press once to show current time, (if set) and channel number.
TV/SAT	Cycles through available Steady Sound settings, (see page 23).
JUMP	Alternates between the last two channels selected with the 0–9 buttons.
GUIDE	Brings up the custom guide of your satellite receiver.
MENU	Displays the on-screen menu. Press again to exit the menu at any time.
RESET	Press to return to factory settings while in an on-screen menu.
CODE SET	Use to program your remote control to operate connected video equipment, (see page 36).

✍ For information on Picture in Picture (PIP) operation buttons, see page 17.

✍ If you lost your remote control, see page 40.

Downloaded from www.Manualslib.com manuals search engine

Troubleshooting

If you are having a problem with your TV, try the suggestions below. If the problem persists, contact your nearest Sony dealer.

No picture, no sound	❑ Make sure the power cord is plugged in. ❑ If red light is flashing on the front of your TV for more than a few minutes, disconnect and reconnect the power cord to restore the TV. If the problem continues, call your local service center. ❑ Check the TV/VIDEO settings: when watching TV, set to TV; when watching video equipment, set to VIDEO (page 14). ❑ Make sure the batteries have been inserted correctly into the remote control (page 2). ❑ Try another channel, it could be station trouble.
Poor or no picture, good sound	❑ Adjust Picture in the Video menu (page 22). ❑ Adjust Brightness in the Video menu (page 22). ❑ Check the antenna and/or cable connections (page 3).
Good picture, no sound	❑ Press MUTING so that MUTING disappears from the screen (page 14). ❑ Check your Audio settings. Your TV may be set to Auto-SAP (page 24).
No color	❑ Adjust Color in the Video menu (page 22).
No signal	❑ Check the Cable setting in the Channel Setup menu (page 25). ❑ Check the antenna and/or cable connections (page 3). ❑ Make sure the channel selected is currently broadcasting.
Dotted lines or stripes	❑ Adjust the antenna. ❑ Move the TV away from other electronic equipment. Some electronic equipment can create electrical noise, which can interfere with TV reception.
Double images or ghosts	❑ Check your outdoor antenna or call your cable service.

Cannot receive higher number channels (UHF) when using an antenna	❑ Make sure Cable is set to OFF in the Channel Setup menu (page 25). ❑ Perform Auto Program to add channels that are not presently in the memory (page 16).
Cable stations don't seem to work	❑ Make sure Cable is set to ON in the Channel Setup menu (page 25). ❑ Perform Auto Program to add channels that are not presently in the memory (page 16).
Remote control does not operate	❑ Batteries could be weak. Replace them (page 2). ❑ Move the TV 3-4 feet away from fluorescent lights.
The TV needs to be cleaned	❑ Clean the TV with a soft dry cloth. Never use strong solvents such as thinner or benzine, which might damage the finish of the cabinet.
Lost password for Parental Control	❑ In the password screen, enter the following master password: 4357. After using the master password, you must create a new password, it cannot be used to unlock currently blocked channels.
You lost your remote control	❑ You can use the front A/V panel controls to access the menu. Press MENU to open the menu. Use the ⊕ or ⊕ buttons on the front A/V panel instead of the ⇧ or ⇩ buttons on the remote control. Use the ⊕ button on the front A/V panel instead of the ⇦, ⇨, and ⊕ buttons on the remote control. Press MENU again when the setting or adjustment is complete. Contact your nearest Sony dealer to order a replacement.
Cannot access other menus when using the Basic Menu	❑ If you use the MENU button to close the Basic menu, only the Basic menu appears when you press MENU again. To have access to the other menus, use the ⇩ button to select Advance Menu (page 35).

If, after reading these Operating Instructions, you have additional questions related to the use of your Sony television, please call our Direct Response Center at 1-800-222-SONY (7669) (U.S. residents only) or (416) 499-SONY (7669) (Canadian residents only).

Downloaded from www.Manualslib.com manuals search engine

SECTION 2
DISASSEMBLY

2-1. REAR COVER REMOVAL

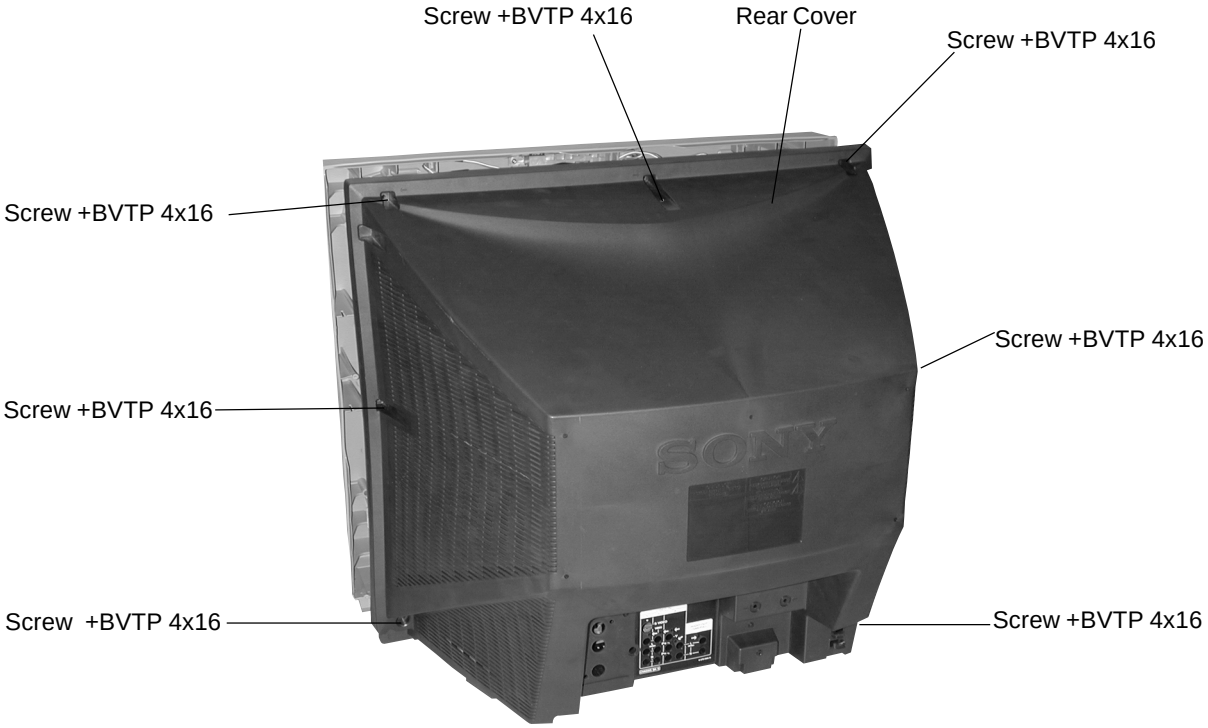

2-2. CHASSIS ASSEMBLY REMOVAL

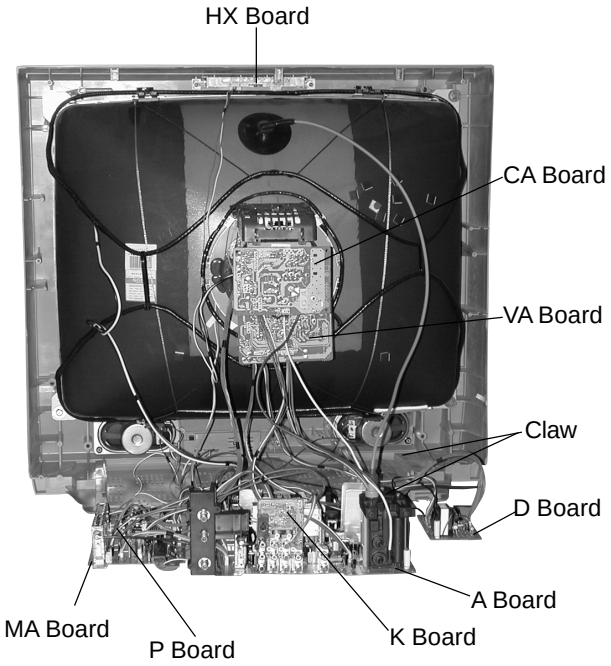

2-3. SERVICE POSITION

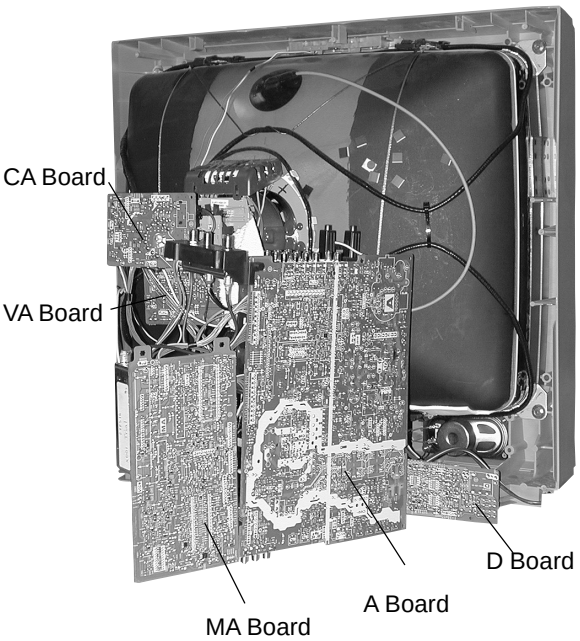

Downloaded from www.Manualslib.com manuals search engine

2-4. PICTURE TUBE REMOVAL

WARNING:
BEFORE REMOVING
THE ANODE CAP

High voltage remains in the CRT even after the power is disconnected. To avoid electric shock, discharge CRT ***before*** attempting to remove the anode cap. Short between anode and CRT coated earth ground strap.

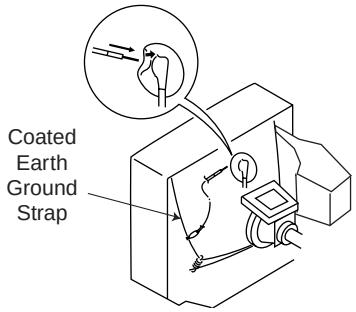

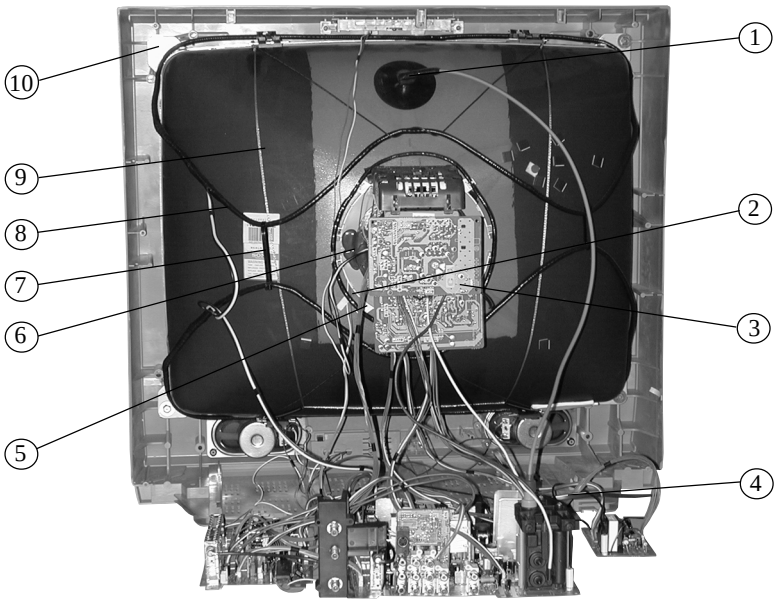

1. Discharge the anode of the CRT and remove the anode cap.
2. Unplug all interconnecting leads from the deflection yoke, neck assembly, degaussing coils and CRT grounding strap.
3. Remove the CA Board from the CRT.
4. Remove the chassis assembly.
5. Loosen the neck assembly fixing screw and remove.
6. Loosen the deflection yoke fixing screw and remove.
7. Place the set with the CRT face down on a cushion and remove the degaussing coil holders.
8. Remove the degaussing coils.
9. Remove the CRT grounding strap and spring tension devices.
10. Unscrew the four CRT fixing screws [located on each CRT corner] and remove the CRT [Take care not to handle the CRT by the neck].

ANODE CAP REMOVAL

WARNING: High voltage remains in the CRT even after the power is disconnected. To avoid electrical shock, discharge the CRT **before** attempting to remove the anode cap. Short between anode and coated earth ground strap of CRT.

NOTE: After removing the anode, short circuit the anode of the picture tube and the anode cap to either the metal chassis, CRT shield, or carbon painted on the CRT.

REMOVAL PROCEDURES

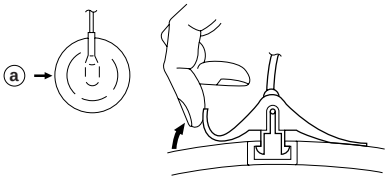

① Turn up one side of the rubber cap in the direction indicated by arrow ⓐ.

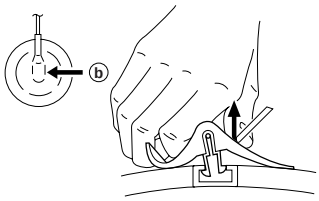

② Use your thumb to pull the rubber cap firmly in the direction indicated by arrow ⓑ.

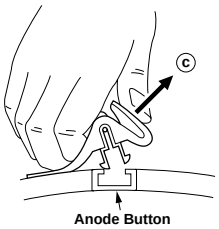

③ When one side of the rubber cap separates from the anode button, the anode cap can be removed by turning the rubber cap and pulling it in the direction of arrow ⓒ.

HOW TO HANDLE AN ANODE CAP

① Do not use sharp objects which may cause damage to the surface of the anode cap.

② To avoid damaging the anode cap, do not squeeze the rubber covering too hard. A material fitting called a shatter-hook terminal is built into the rubber.

③ Do not force turn the foot of the rubber cover. This may cause the shatter-hook terminal to protrude and damage the rubber.

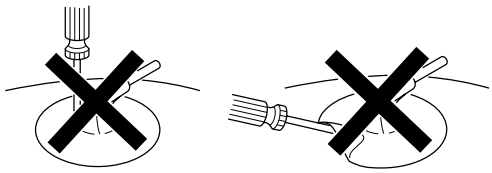

Downloaded from www.Manualslib.com manuals search engine

SECTION 3
SET-UP ADJUSTMENTS

The following adjustments should be made when a complete realignment is required or when a new picture tube is installed.

These adjustments should be performed with rated power supply voltage unless otherwise noted.

Set the controls as follows unless otherwise noted:

VIDEO MODE: STANDARD
PICTURE control: ..... Normal
BRIGHTNESS control: ..... Normal

Perform the adjustments in order as follows:

1. Beam Landing
2. Convergence
3. Focus
4. Screen (G2)
5. White Balance

Note: Test equipment required:

- Color Bar Pattern Generator
- Degausser
- DC Power Supply
- Digital Multimeter

3-1. BEAM LANDING

Before beginning adjustment procedure:

1. Degauss the entire screen.
2. Feed in the white pattern signal.

Adjustment Procedure

1. Input a raster signal with the pattern generator.
2. Loosen the deflection yoke mounting screw and set the purity control to the center as shown below.

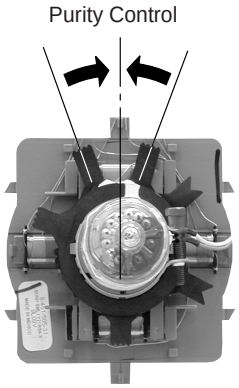

3. Turn the raster signal of the pattern generator to green.
4. Move the deflection yoke backward and adjust the purity control so that green is in the center and red and blue are at the sides evenly.

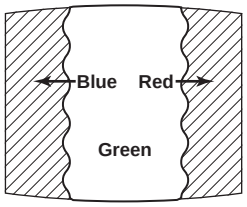

5. Move the deflection yoke forward and adjust so that the entire screen becomes green.
6. Switch over the raster signal to red and blue and confirm the condition.
7. When the position of the deflection yoke is determined, tighten it with the deflection yoke mounting screw.
8. If landing at the corner is not right, adjust by using the disk magnets.

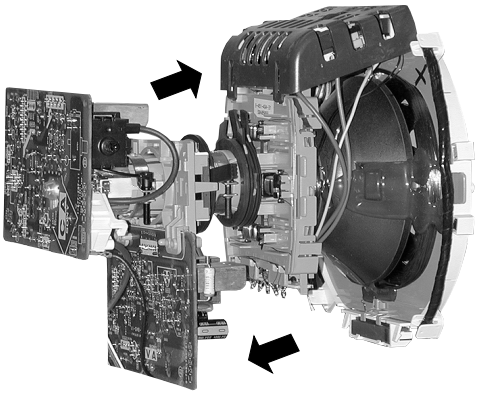

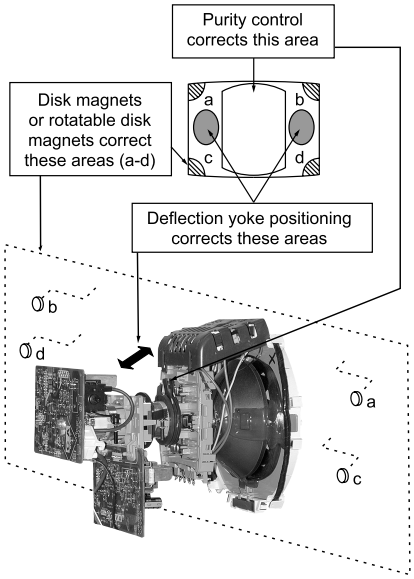

Downloaded from www.Manualslib.com manuals search engine

3-2. CONVERGENCE

Before starting convergence adjustments:

1. Perform FOCUS, V.LIN AND V.SIZE adjustments.
2. Set BRIGHTNESS control to minimum.
3. Feed in dot pattern.

Vertical Static Convergence

1. Adjust V.STAT magnet to converge red, green and blue dots in the center of the screen (Vertical movement adjust V.STAT RV 701 to converge).

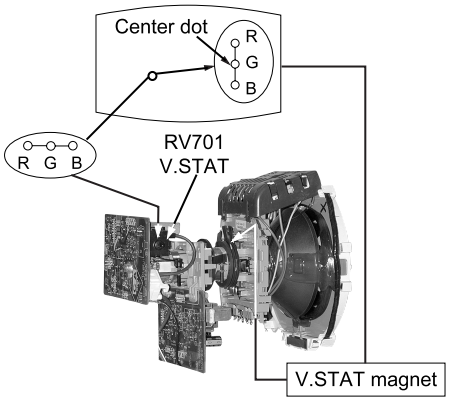

2. Tilt the V.STAT magnet and adjust static convergence to open or close the V.STAT magnet.

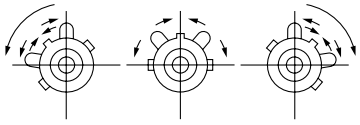

When the V.STAT magnet is moved in the direction of arrows a and b, red, green, and blue dots move as shown below:

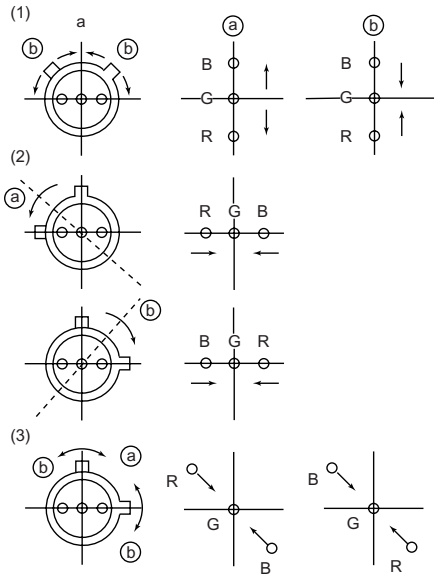

Horizontal Static Convergence

If the blue dot does not converge with the red and green dots, perform the following:

1. Move BMC magnet (a) to correct insufficient H. Static convergence.
2. Rotate BMC magnet (b) to correct insufficient V. Static convergence.
3. After adjusting the BMC magnet, repeat Beam Landing Adjustment.

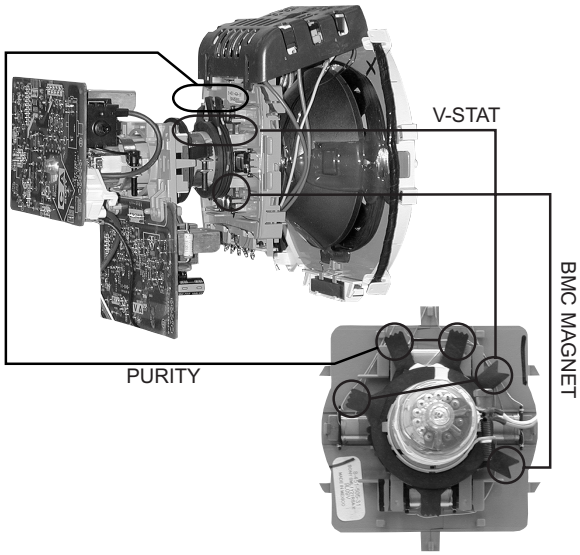

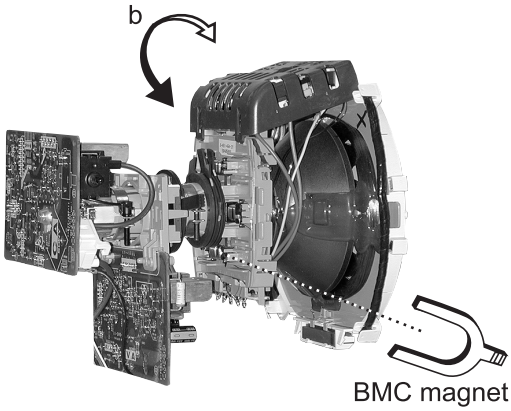

Dynamic Convergence Adjustment

Before performing this adjustment, perform Horizontal and Vertical Static Convergence Adjustment.

1. Slightly loosen deflection yoke screw.
2. Remove deflection yoke spacers.
3. Move the deflection yoke for best convergence as shown on the following page.

Downloaded from www.Manualslib.com manuals search engine

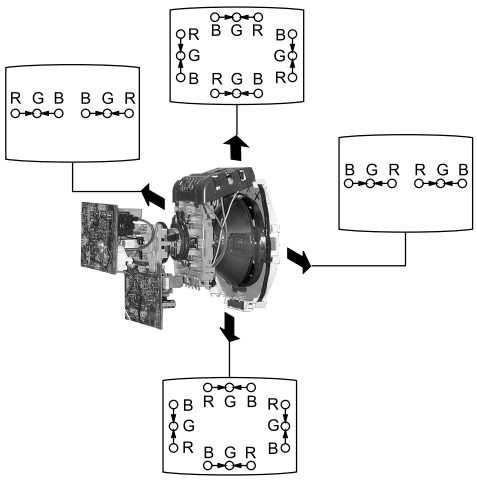

4. Tighten the deflection yoke screw.
5. Install the deflection yoke spacers.

TLH Plate Adjustment

1. Input crosshatch pattern.
2. Adjust PICTURE QUALITY to standard, PICTURE and BRIGHTNESS to 50%, and OTHER to standard.
3. Adjust the Horizontal Convergence of red and blue dots by tilting the TLH plate on the deflection yoke.

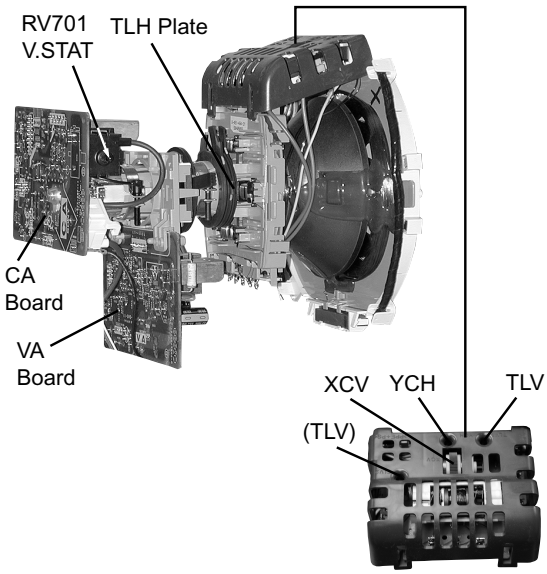

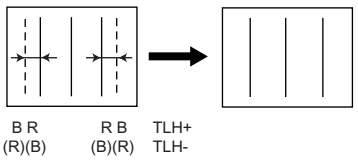

4. Adjust XCV core to balance X axis.
5. Adjust YCH VR to balance Y axis.
6. Adjust vertical red and blue convergence with V.TILT (TLV VR).

Note: Perform adjustments while tracking items 1 and 2.

Screen-Corner Convergence

1. Affix a permalloy assembly corresponding to the misconverged areas.

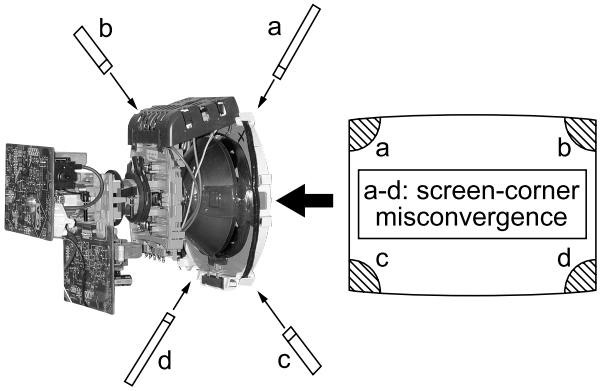

3-3. FOCUS

1. Adjust FOCUS control for best picture.

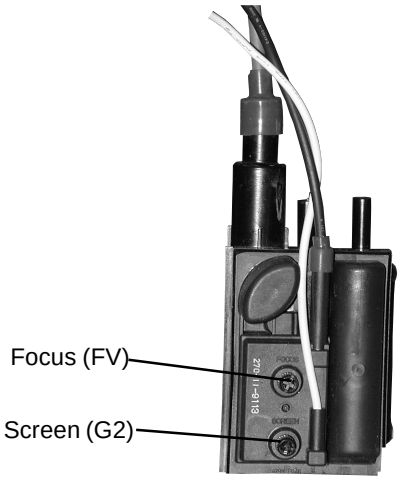

Downloaded from www.Manualslib.com manuals search engine

3-4. SCREEN (G2)

1. Input a dots pattern.
2. Set the PICTURE and BRIGHTNESS controls at minimum and COLOR control at normal.
3. Adjust SBRT, GCUT, BCUT in service mode with an oscilloscope as shown below so that voltages on the red, green, and blue cathodes are 170 VDC.

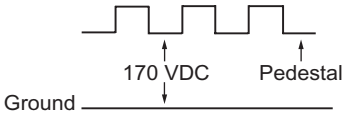

4. Observe the screen and adjust SCREEN (G2) VR in FBT to obtain the faintly visible background of dot signal.

3-5. METHOD OF SETTING THE SERVICE ADJUSTMENT MODE

Service Mode Procedure

1. Standby mode (power off).
2. [Display] ➡ Channel [5] ➡ Sound volume [+] ➡ Power on the Remote Commander (press each button within a second).

Service Adjustment Mode In

1. The CRT displays the item being adjusted.

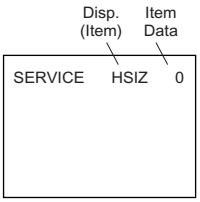

2. Press [1] or [4] on the Remote Commander to select the item.
3. Press [3] or [6] on the Remote Commander to change the data.
4. Press [MUTING] then [ENTER] to save into the memory.

Service Adjustment Mode Memory

Turn set off then on to exit service adjustment mode.

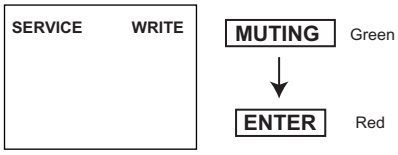

3-6. WHITE BALANCE ADJUSTMENTS

1. Input an entire white signal with burst.
2. Set to Service Adjustment Mode.
3. Set the PICTURE and BRIGHTNESS to minimum.
4. Adjust with SBRT if necessary.
5. Select GCUT and BCUT with [1] and [4] .
6. Adjust with [3] and [6] for the best white balance.
7. Set PICTURE and BRIGHTNESS to maximum.
8. Select GDRV and BDRV with [1] and [4] .
9. Adjust with [3] and [6] for the best white balance.
10. To write into memory, press [MUTING] then [ENTER] .

Downloaded from www.Manualslib.com manuals search engine

SECTION 4
SAFETY RELATED ADJUSTMENTS

4-1. ⋈ R564 CONFIRMATION METHOD (HV HOLD-DOWN CONFIRMATION) AND READJUSTMENTS

The following adjustments should always be performed when replacing the following components which are marked with ◪ on the schematic diagram:

Part Replaced (◪)	Adjustment (⋈)
DY, T505, CRT, IC501, C507, C520, C505, C509, C515, T504, T503, C551, L510, C546, C537, C547, D517, D518, D519, R560, R561, R562, R563, R565, R566, R567, R525 ..... .A Board IC301 ..... MA Board	HV HOLD-DOWN R564

Preparation Before Confirmation

1. Using a Variac, apply AC input voltage: 120-220 ± 2 VAC.
2. Turn the POWER switch ON.
3. Input a white signal and set the PICTURE and BRIGHTNESS controls to maximum.
4. Confirm that the voltage between C546 (+) or TP503 and ground is more than 21.0 VDC.

Hold-Down Operation Confirmation

1. Connect the current meter between Pin 11 of the FBT (T505) and the PWB land where Pin 11 would normally attach. (See Figure 1 on the next page.)
2. Input a dot signal and set PICTURE and BRIGHTNESS to minimum: IABL = 1730 ± 100 µA.
3. Confirm the voltage of A Board TP-600 is 135 ± 1.5 VDC.
4. Connect the digital voltmeter and the DC power supply via diode 1SS119 to C546 (+) and ground. (See Figure 1 on the next page.)
5. Increase the DC power voltage gradually until the picture blanks out.
6. Turn DC power source off immediately.
7. Read the digital voltmeter indication (standard < 24.78+0,-0.1 VDC).
8. Input a white signal and set PICTURE and BRIGHTNESS to maximum: IABL = 1730 ± 100 µA.
9. Repeat steps 4 to 7.

Hold-Down Readjustment

If the setting indicated in step 2 of Hold-Down Operation Confirmation cannot be met, readjustment should be performed by altering the resistance value of R564 component marked with ⋈ .

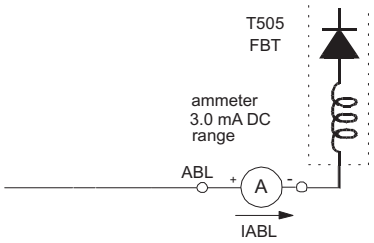

4-2. B+ VOLTAGE CONFIRMATION AND ADJUSTMENT

Note: The following adjustments should always be performed when replacing the following components, which are marked with ◪ on the schematic diagram on the A Board.

A BOARD:	IC601, PH601

1. Using a Variac, apply AC input voltage: 130 ± 2 VAC.
2. Input a dot signal.
3. Set the PICTURE and BRIGHTNESS controls to minimum.
4. Confirm that the voltage of A Board TP-600 is <136.5 VDC.
5. If step 3 is not satisfied, replace the components listed above, then repeat steps 1–3.

Downloaded from www.Manualslib.com manuals search engine

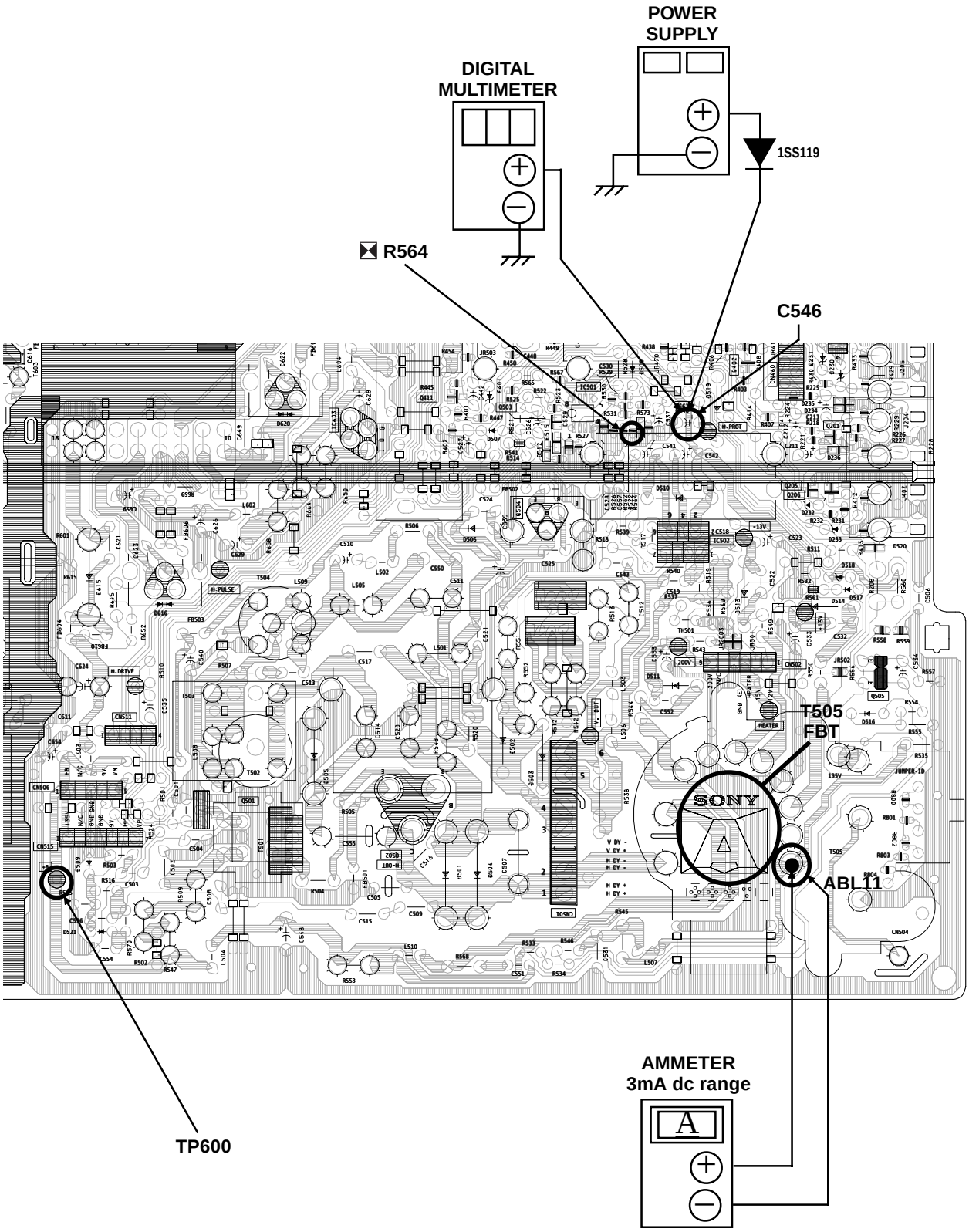

Figure 1

Downloaded from www.Manualslib.com manuals search engine

SECTION 5
CIRCUIT ADJUSTMENTS

ELECTRICAL ADJUSTMENTS BY REMOTE COMMANDER

Use the Remote Commander (RM-Y168 or RM-Y169) to perform the circuit adjustments in this section.

NOTE: Test Equipment Required:

- Pattern generator
- Frequency counter
- Digital multimeter
- Audio oscillator

5-1. SETTING THE SERVICE ADJUSTMENT MODE

1. Standby mode (power off).
2. [Display] ➡ Channel [5] ➡ Sound volume [+] ➡ Power on the Remote Commander (press each button within a second).

Service Adjustment Mode On

1. The CRT displays the item being adjusted.

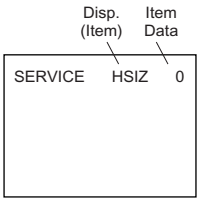

2. Press [1] or [4] on the Remote Commander to select an item.
3. Press [3] or [6] on the Remote Commander to change the data.
4. Press [MUTING] then [ENTER] to save into the memory.

Service Adjustment Mode Memory

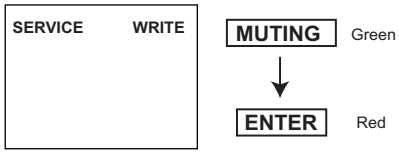

1. Press [8] then [ENTER] on the Remote Commander to initialize.

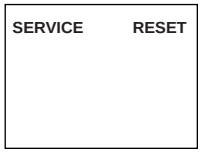

Carry out step 1 when adjusting IDs 0–4 and when replacing and adjusting IC003.

2. Turn set off then on to exit service adjustment mode.

5-2. MEMORY WRITE CONFIRMATION METHOD

1. After adjustment, remove the power plug from the AC outlet, then plug it in again.
2. Turn the power switch ON and set to service mode.
3. Call the adjusted items again to confirm they were adjusted.

5-3. ADJUSTMENT BUTTONS AND INDICATORS

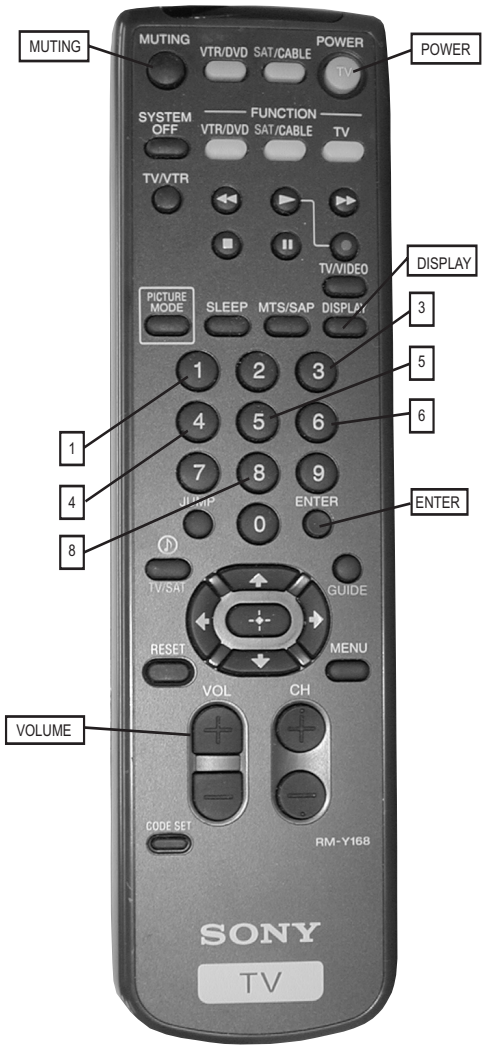

RM-Y168

Downloaded from www.Manualslib.com manuals search engine

Adjustment Items

Reg #	ITEM	FUNCTION	RANGE	FIX DATA	NTSC	PAL M	PAL N	VIDEO	RF	AVERAGE DATA
1	HSIZ	Horizontal Size Adjustment	0-63		15	12	7			14
2	HPOS	Horizontal Position Adjustment	0-63		13	8	9			17
3	VBOW	Vertical Line Bowing Adj.	0-15		9	10	8			6
4	VANG	Vertical Line Bowing Slant Adj.	0-15		8	10	9			12
5	VTRP	TRAPEZIUM	0-31		19	14	14			16
6	HTRP	Horiz. Trapezoid	0-15		6	7	5			0
7	TROT	Tilt Correction	0-63		31	31	31			31
8	PAMP	Horizontal PIN distortion Adj.	0-63		19	19	21			20
9	UPIN	Upper PIN Distortion Adj.	0-63		34	33	36			35
10	LPIN	Lower PIN Distortion Adj.	0-63		32	34	40			34
11	VSIZ	Vertical Size Adjustment	0-63		32	43	29			38
12	VPOS	Vertical Position Adj.	0-63		30	30	32			29
13	VLIN	Vertical lineality Adj.	0-15		3	6	10			5
14	SCOR	Vertical "S" Correction Adjustment	0-15		6	8	10			7
15	VZOM	16:9 CRT Z Mode on/off	0-1	0						0
16	EHT	Vertical High-Voltage Compensation	0-15	5						5
17	ASP	Aspect Ratio control	0-63	47						47
18	SCRL	16:9 CRT Z Mode Trans. Scroll	0-63	31						31
19	HBLK	Horizontal Blanking on/off	0-1	1						1
20	LBLK	Left Blanking Adjustment	0-15	13						14
21	RBLK	Rigth Blanking Adjustment	0-15	8						8
22	HDW	Horizontal Drive Pulse Width		1						1
23	EWDC	"Parabola" EW, D.C. Adjustment	0-1	0						0
24	LVLN	Lower Screen BTM Vertical Line Adj.	0-15	0						0
25	UVLN	Uppe Screen BTM Vertical Line Adj.	0-15	0						0
26	INTL	INTERLACE	0-3	0						0
27	G2SW		0-1	0						0
28	G2LV		0-7	0						0
29	HOSC	Horizontal VCO Oscillation Freq.	0-15	7						7
30	VSS	Vertical Sync Slice Level	0-3	0						0
31	HSS	Horizontal Sync Slice Level	0-1	0						0
32	HMSK	For Macro Vision	0-1	0						0
33	VTMS	Select Signal VTIM Pin	0-3	0						0
34	CDMD	Vertical Count Down Mode Switching	0-3		*	*	*	3		3
35	AFC	AFC Loop Gain Switching	0-3	0						0
36	FIFR	Field Frequency	0-3	3						3
37	VBLK	VBLKW	0-3	0						0
38	REFP	REFP	0-1	0						0
39	JPSW	JUMPSW	0-1	MENU						0
40	RDRV	R Output Drive control	0-63	41						38
41	GDRV	G Output Drive control	0-63	25						28
42	BDRV	B Output Drive control	0-63	25						26
43	RCUT	R Output Cutoff control	0-63	31						31
44	GCUT	G Output Cutoff control	0-63	15						13
45	BCUT	B Output Cutoff control	0-63	12						14
46	SCON	SUB CONT	0-15	8						10
47	SHUE	Sub HUE adjustment	0-15	16						16
48	SCOL	Sub COLOR adjustment	0-15	18						18
49	SBRT	Sub BRIGHTNESS adjustment	0-31	16	16	16	16			17
50	CHUE	SUB COLOR (RF)	0-31	7						6
51	CCOL	SUB COLOR (RF)	0-31	7						4
52	UOFS	YUV U OFFSET	0-15	7	7	7	7			7
53	VOFS	YUV V OFFSET	0-15	7						7
54	RON	R Output on/off	0-1	1						1
55	GON	G Output on/off	0-1	1						1
56	BON	B Output on/off	0-1	1						1
57	AXPL	Axis PAL	0-1	0						0
58	AXNT	Axis NTSC	0-1	1						1
59	CBPF	Chroma BPF on/off	0-1	1						1
60	CTRP	Y TRAP FILTER on/off	0-1	1						1
61	COFF	Color On/off	0-1	0						0
62	KOFF	Set Color Killer	0-1	0						0
63	SSHP	Sub SHARPNESS	0-15	5						5
64	SHPF	SHARPNESS Circuit Fo	0-3	Palette						2
65	PREL	Pre-Shoot/ Over-Shoot	0-1	1						0
66	Y-DC	DC transmition Ratio Switching	0-3	Palette						2
67	GAMM	Gamma Correction	0-3	Palette						2
68	ABLM	ABL Mode Switch	0-1	1						1
69	VTH	ABL CD VHT Switching	0-1	1						1
70	YDEL	Y Delay Time Control	0-15	7						7
71	NCOL	No Color ID	0-1	1						1
72	FSC	FSC Out on/off	0-1	1						1
73	K-ID	Killer ID Control on/off	0-1	0						0
74	GDOF		0-31	3						3
75	BDOF		0-31	16						16
76	GCOF		0-31	16						16
77	BCOF		0-31	7						7
78	SYSC	Color System	0-7	4						4
79	VENH	Vertical Enhancement	0-7	Palette						3

Downloaded from www.Manualslib.com manuals search engine

Reg #	ITEM	FUNCTION	RANGE	FIX DATA	NTSC	PAL M	PAL N	VIDEO	RF	AVERAGE DATA
80	PDSO	PDS OFF	0-1	0						0
81	CK	CK	0-1	0						0
82	VNL	VNL	0-15	3						3
83	HPK	HPK	0-1	0						0
84	HPKO	HPK OFF	0-1	Palette						0
85	CORE	CORE	0-3	2						1
86	TRAP	TRAP	0-1	1						1
87	CHTR	CH TRAP	0-1	0						0
88	CBPF	CBPF	0-1	1						1
89	ENHO	ENHOFF	0-1	0						0
90	NMRD	NMRD	0-3	0						0
91	YAPS	YAPS	0-3	3						3
92	CLKS	CLKS	0-3	0						0
93	NSTD	NSTDS	0-3	0						0
94	MSS	MSS	0-3	0						0
95	KILS	KILS	0-3	1						1
96	ADIN	ADIN	0-1	0						0
97	EXCS	EXCSS	0-3	1						1
98	CPP	CPP	0-3	2						2
99	HDP	HDP	0-7	4						4
100	CDL	CDL	0-7	4						4
101	DYCR	DYCOR	0-15	2						2
102	DYGN	DYGAIN	0-15	10						10
103	DCCR	DCCOR	0-15	3						3
104	DCGN	DCGAIN	0-15	6						6
105	YNRL	YNRLIM	0-3	1						1
106	CNRL	CNRLIM	0-3	1						1
107	WSC	WSC	0-3	1						1
108	VTRH	VTRH	0-3	1						1
109	VTRR	VTRR	0-3	1						1
110	LDSR	LDSR	0-3	2						2
111	VAPG	VAPGAIN	0-7	3						3
112	VAPI	VAPINV	0-31	6						6
113	TEST	TEST	0-1	0						0
114	YPFT	YPFT	0-3	3						3
115	YPFG	YPFG	0-15	7						7
116	CC3N	CC3N	0-1	0						0
117	SELD		0-1	1						1
118	D2GN	D2GAIN	0-7	5						5
119	YHCR	YHCOR	0-3	0						0
120	YPFC	YPFCOR	0-1	0						0
121	SHT	SHT	0-3	0						0
122	MVT	MVT	0-1	0						0
123	OTT	OTT	0-1	0						0
124	CL2D	CL2D	0-1	1						1
125	CLKG	CLKGGT	0-1	0						0
126	HPLL	HPLLFS	0-1	1						1
127	BPLL	BPLLFS	0-1	0						0
128	FSCF	FSCFG	0-1	0						0
129	PLLS	PLLS	0-1	1						1
130	KILR	KILR	0-15	3						3
131	HSSL	HSSL	0-15	12						12
132	VSSL	VSSL	0-15	8						8
133	BGPS	BGPS	0-15	4						4
134	BGPW	BGPW	0-15	10						10
135	ADCK	ADCLKS	0-3	3						3
136	NDSW	NSDSW	0-1	1						1
137	PFRN	FREE_RUN	0-1	0						0
138	PRVS	RVS	0-1	0						0
139	PCON	CONTRAST	0-127	45						45
140	PUCO	U-DAC	0-127	16						16
141	PVCO	V-DAC	0-127	24						24
142	PHUE		0-31	15						15
143	PKIL	KILLER	1	0						0
144	PSEP	EXT_SC_SEL	0-3	2						2
145	PHIM		0-1	0						0
146	PSUB		0-1	0						0
147	PBGS	BG_START	0-63	14						14
148	PDL0		0-15	6						6
149	PDL1		0-15	13						13
150	PBRT	Y_OFFSET	0-31	25						25
151	PVP1			0						0
152	PUP1			0						0
153	PVP2			2						0
154	PUP2			2						0
155	PVP3			2						0
156	PUP3			2						0
157	PACS	SET_ACC	0-1	1						1
158	PSDL	SYNC_DELAY	0-3	0						0

Downloaded from www.Manualslib.com manuals search engine

Reg #	ITEM	FUNCTION	RANGE	FIX DATA	NTSC	PAL M	PAL N	VIDEO	RF	AVERAGE DATA
159	PDCO		0-3	0						0
160	PCGA	C_GAIN	0-1	1						1
161	PAAF		0-1	0						0
162	PSU2		0-1	0						0
163	PCVF		0-1	0						0
164	PBIT	BITSEL	0-1	0						0
165	PAFC	AFCBITSEL	0-1	0						0
166	PACC	ACC_LEVEL	0-63	22						22
167	PBUR	BURST_CLK	0-1	0						0
168	PEVE	EVENUPRA	0-1	0						0
169	PINW	INV_WFF	0-1	0						0
170	PINR	INV_REF	0-1	0						0
171	PREF	RFF_FIX	0-1	0						0
172	PARE	AUTO_REF	0-1	1						1
173	PAVE	AVERAGE	0-1	0						0
174	PFRA	FREE_RUN_ADJ	0-15	0						0
175	PPAL	SUB_PALM_JUDGE	0-255	0						0
176	PHPO		0-31	6						6
177	PVPO		0-31	22						22
178	PHTI	HT	0-15	7						9
179	PHAJ	ADJ	0-15	1						1
180	PBGY	BGY	0-15	0						0
181	PCRO	CROSS_SEL	0-1	0						0
182	PPAR	PALRY	0-63	2						2
183	PHPF	HPFOFF	0-1	0						0
184	PFSC	FSC_OUTPUT	0-1	0						0
185	PVCH	SET_VCHIP	0-1	0						0
186	PVON	VCHIP_ONLY	0-1	1						1
187	PVLN	LINE_NUM	0-31	17						17
188	PVSB	STB_DLY	0-255	64						64
189	PVLV	L_LEVEL	0-255	130						130
190	SBAL	Sub Balance	0-7	5						5
191	SBAS	Sub Bass	0-7	0						0
192	STRE	Sub Trebble	0-7	3						3
193	BBEL	BBE Low	0-15	0	0					0
194	BBEH	BBE High	0-15	0	0					0
195	BBE	BBE	0-1	0	0					0
196	AUX	SRS, Simulated	0-3	0	0					0
197	DISP	O.S.D Display position	0-127	20						34
198	HCLW	Horizontal Count lower limit	0-255	16				16		16
199	HCHG	Horizontal Count High limit	0-255	64	0	0		64		64
200	ID0		0-255	89			1			See ID Map
201	ID1		0-255	31						See ID Map
202	ID2		0-255	79						See ID Map
203	ID3		0-255	146						See ID Map
204	ID4		0-255	137						See ID Map
205	ID5		0-255	19						See ID Map
206	ID6		0-255	0						See ID Map

* CDMD = 3 For US & CND, CDMD = 0 For Others

Notes:

No. 1–206 show the order that each adjustment mode may be selected while in service mode.

Data Range shows the range of possible settings for each adjustment mode.

Initial Data shows the standard settings for each adjustment mode.

SERVICE	ID0	25

Feature ID Map

	Destination	ID-0	ID-1	ID-2	ID-3	ID-4	ID-5	ID-6
KV-27FS12	(US)	89	31	79	146	137	19	0
KV-27FS12	(CND)	89	31	79	178	137	19	0
KV-27FS16	(US)	89	31	79	146	137	19	7
KV-29FS12	(E)	17	31	223	130	233	19	0
KV-29FS12C	(E)	17	31	223	130	233	19	0

5-4. MA BOARD ADJUSTMENTS

H. Frequency (Free Run) Check

1. Input a TV mode (RF) with no signal.
2. Connect a frequency counter to base of Q501 (TP-500 H. DRIVE) on the A Board.
3. Check H. Frequency for 15735 ± 200 Hz.

V. Frequency (Free Run) Check

1. Select video 1 with no signal input.
2. Set the conditions for a standard setting.
3. Connect the frequency counter to TP-502 (V OUT) or CN501 pin ⑥ (V DY+) and ground on the A Board .
4. Check that V. Frequency shows 60 ± 4 Hz.

Drive (RDRV)

1. Input a color-bar signal and set the level to 75%.
2. Set in Standard mode.

Downloaded from www.Manualslib.com manuals search engine

3. Activate the Service Adjustment Mode.4. Set both GON and BON items. Using [3] and [6]; set each to the following values. Leave RON set to "1".

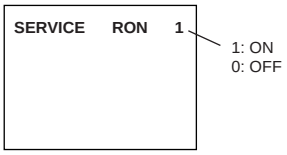

R ON:	ON	(1)
G ON:	OFF	(0)
B ON:	OFF	(0)

5. Connect an oscilloscope probe to CA Board, J701 Pin 12 (KR) (Red Out) .
6. Select RDRV with [1] and [4] .
7. Adjust the value of RDRV with [3] and [6] for 92.5 ± 3 VDC.

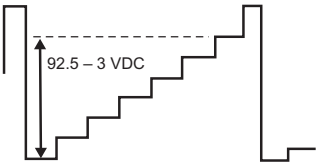

8. Reset GON and BON values to "1".

R ON:	ON	(1)
G ON:	ON	(1)
B ON:	ON	(1)

9. Press [MUTING] then [ENTER] to save into the memory.

Display Position Adjustment (DISP)

1. Input a color-bar signal.
2. Set to Service Adjustment Mode.
3. Select DISP with [1] and [4] .
4. Adjust values of DISP with [3] and [6] to adjust characters to the center.
5. Write to memory by pressing [MUTING] then [ENTER] .
6. Check to see if the text is displayed on the screen.

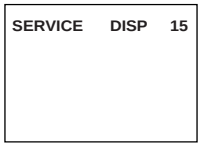

Sub Bright Adjustment (SBRT)

1. Input a monoscope signal.
2. Activate the Service Adjustment Mode.
3. Set the PICTURE and BRIGHTNESS to minimum.
4. Select the SBRT item with [1] and [4] .
5. Adjust the values of SBRT with [3] and [6] to obtain a faintly visible crosshatch.
6. Press [MUTING] then [ENTER] to save into the memory.

Sub Hue, Sub Color Adjustment (CHUE, CCOL)

1. Input a color-bar signal.
2. Activate the Service Adjustment Mode.
3. Connect an oscilloscope probe to CA Board, CN1752 Pin ④.
4. Select the CHUE and CCOL item with [1] and [4] .
5. While showing the CHUE item, adjust the waveform with [3] and [6] until the second and third bars show the same level (V2 = V3 < 0.1 Vp-p).
6. While showing the CCOL item, adjust the waveform with [3] and [6] until the first and fourth bars show the same level (V1 = V4 < 0.1 Vp-p).

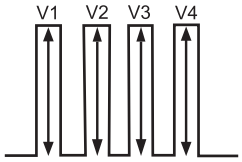

7. Press [MUTING] then [ENTER] to save into the memory.

V. Size Adjustment (VSIZ)

1. Input a crosshatch signal.
2. Activate the Service Adjustment Mode.
3. Select the VSIZ item with [1] and [4] .
4. Adjust value of VPOS with [3] and [6] for the best vertical center.
5. Press [MUTING] then [ENTER] to save into the memory.

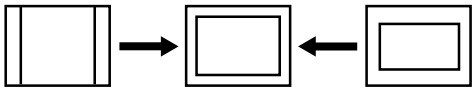

V. Center Adjustment (VPOS)

Perform this adjustment after performing H. Frequency (Free Run) Check.

1. Input a crosshatch signal.
2. Activate the Service Adjustment Mode.
3. Select the VPOS item with [1] and [4] .
4. Adjust value of VPOS with [3] and [6] for the best vertical center.
5. Press [MUTING] then [ENTER] to save into the memory.

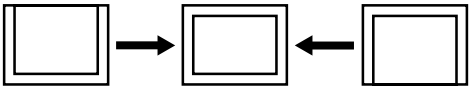

H. Center Adjustment (HPOS)

Perform this adjustment after performing H. Frequency (Free Run) Check.

1. Input a crosshatch signal.
2. Activate the Service Adjustment Mode.
3. Select the HPOS item with [1] and [4] .
4. Adjust the value of HPOS with [3] and [6] for the best

Downloaded from www.Manualslib.com manuals search engine

horizontal center.

5. Press MUTING then ENTER to save into the memory.

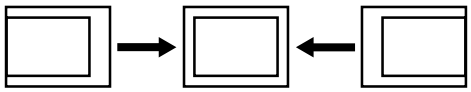

H. Size Adjustment (HSIZ)

1. Input a monoscope signal.
2. Activate the Service Adjustment Mode.
3. Select HSIZ with 1 and 4 .
4. Adjust with 3 and 6 for the best horizontal size.
5. Press MUTING then ENTER to save into the memory.

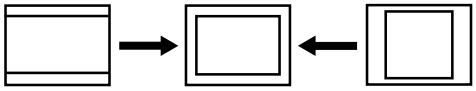

V. Linearity (VLIN), V. Correction (VSCO), Pin Amp (PAMP), and Horizontal Trapezoid (TRAP) Adjustments

1. Input a crosshatch signal.
2. Activate the Service Adjustment Mode.
3. Select VLIN, VSCO, PAMP, and PPHA with with 1 and 4.
4. Adjust with 3 and 6 for the best horizontal size.
5. Press MUTING then ENTER to save into the memory.

V LINEARITY (VLIN)

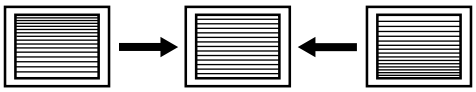

V CORRECTION (VSCO)

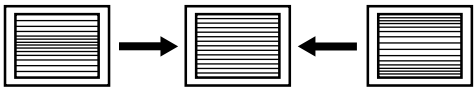

PIN AMP (PAMP)

HORIZONTAL TRAPEZOID (TRAP)

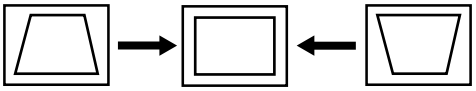

V. Angle (VANG), V. Bow (VBOW), Upper pin (UPIN) and Low Pin (LPIN) Adjustments

1. Input a crosshatch signal.
2. Activate the Service Adjustment Mode.
3. Select VANG, VBOW, UPIN, and LPIN with 1 and 4.
4. Adjust with 3 and 6 for the best picture.
5. Press MUTING then ENTER to save into the memory.

V ANGLE (VANG)

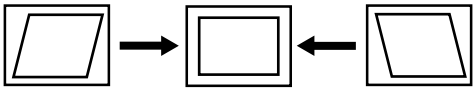

V BOW (VBOW)

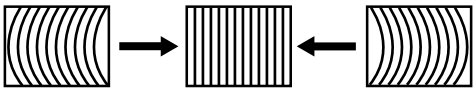

UPPER PIN (UPIN)

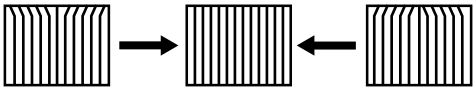

LOW PIN (LPIN)

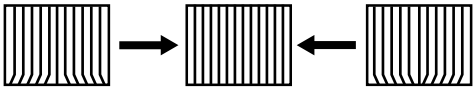

Service Adjustment Mode Memory

1. Change the value of the DCOL item to “1”.
2. After completing all adjustments, press 0 then ENTER .

Read From Memory

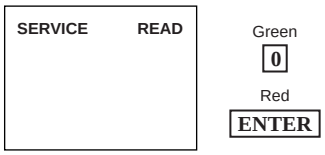

Downloaded from www.Manualslib.com manuals search engine

NOTES:

Downloaded from www.Manualslib.com manuals search engine

NOTES:

Downloaded from www.Manualslib.com manuals search engine

NOTES:

Downloaded from www.Manualslib.com manuals search engine

SECTION 6
DIAGRAMS

6.1 BLOCK DIAGRAM

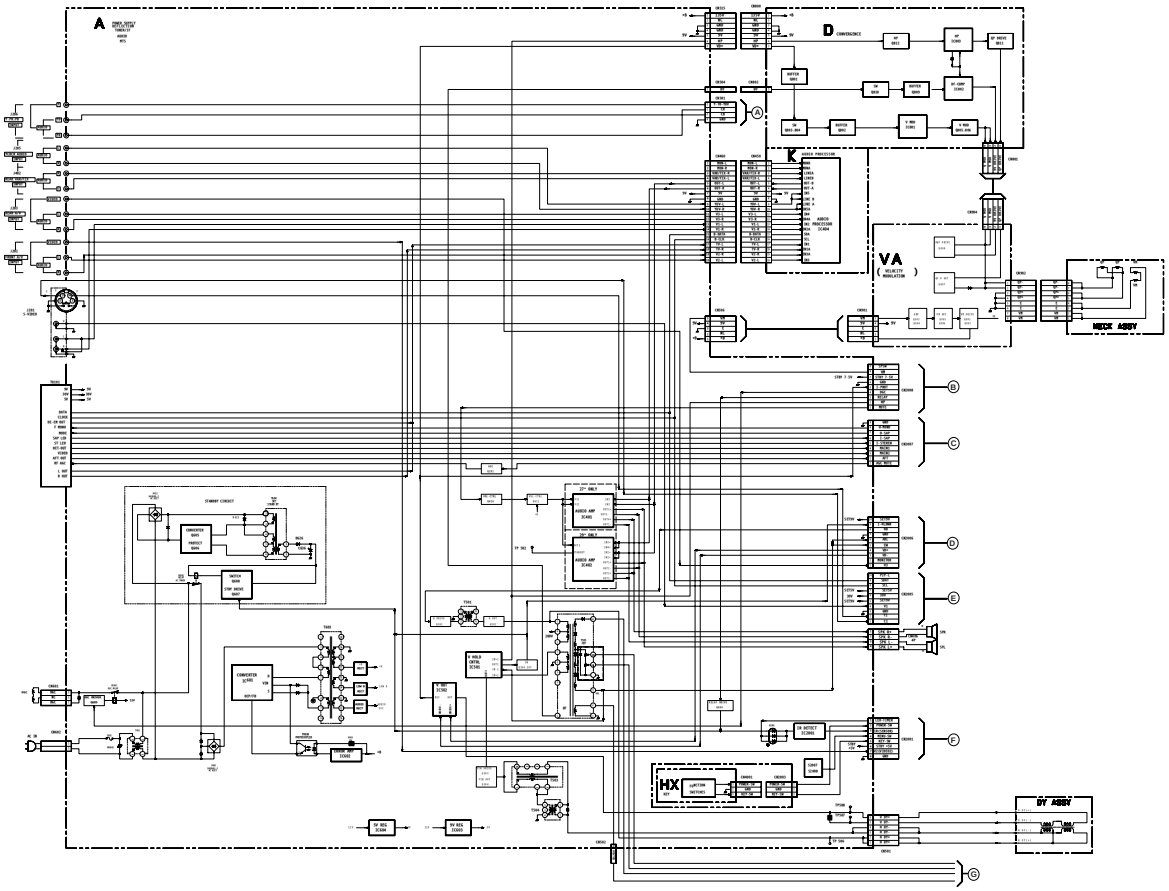

Downloaded from www.Manualslib.com manuals search engine

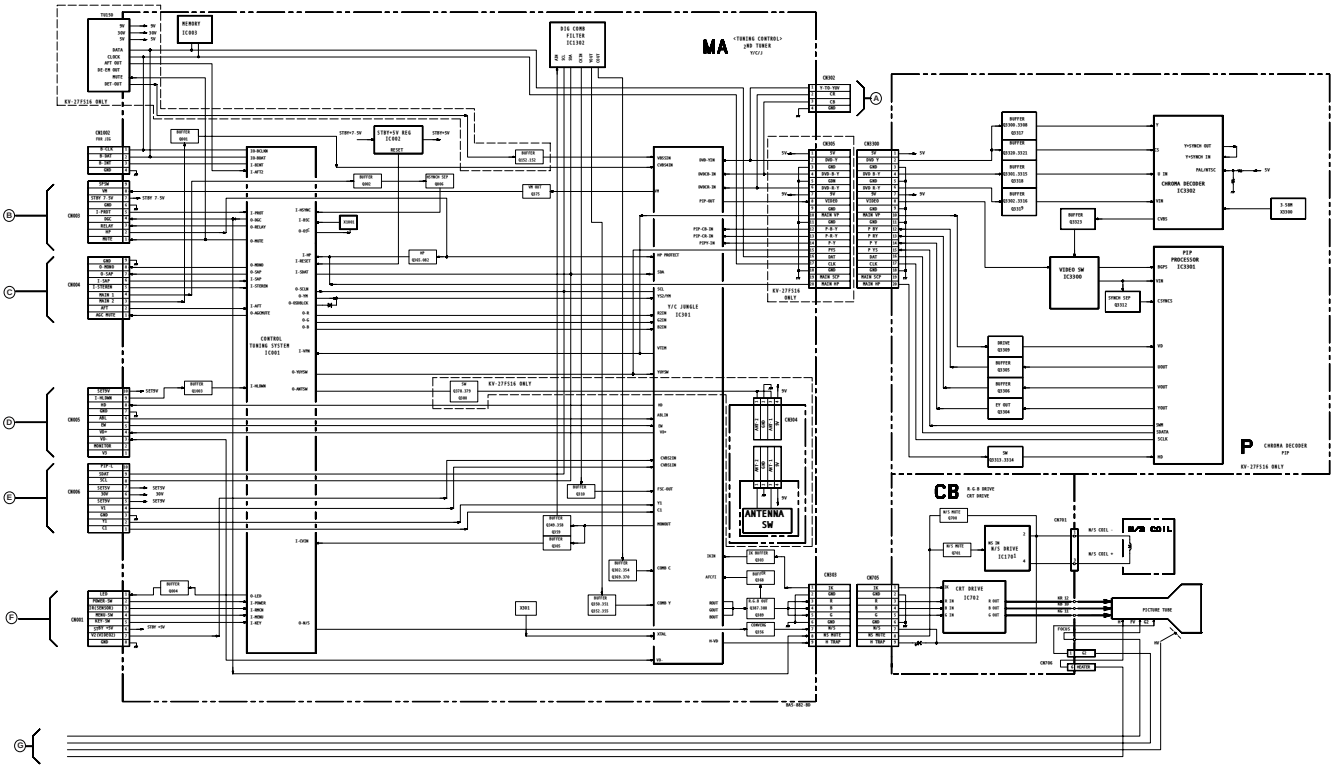

Downloaded from www.Manualslib.com manuals search engine

6.2 CIRCUIT BOARD LOCATIONS

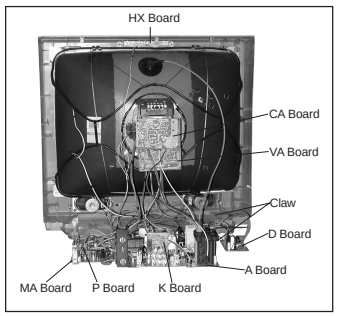

Part Replaced (◪)	Adjustment (⋈)
DY, T505, CRT, IC501, C507, C520, C505, C509, C515, T504, T503, C551, L510, C546, C537, C547, D517, D518, D519, R560, R561, R562, R563, R565, R566, R567, R525.....A Board IC301.....MA Board	HV HOLD-DOWN (R564)
IC601, PH601.....A Board	B+ VOLTAGE CONFIRMATION

6-3. PRINTED WIRING BOARDS AND SCHEMATIC DIAGRAMS

- All capacitors are in µF unless otherwise noted. pF: µµF 50 WV or less are not indicated except for electrolytic and tantalums.
- All electrolytics are 50V unless otherwise specified.
- Indication of resistance, which does not have one for rating electrical power, is as follows:

  Pitch: 5mm

  Rating electrical power 1/4W (CHIP: 1/10W)
- All resistors are in ohms.

  KΩ = 1000Ω MΩ = 1000KΩ
- : nonflammable resistor
- : fusible resistor
- △ : internal component
- ▭ : panel designation and adjustment for repair
- ⊥ : earth-ground
- ⏚ : earth-chassis
- All variable and adjustable resistors have characteristic curve B, unless otherwise noted.
- The components identified by ⋈ in this manual have been carefully factory-selected for each set in order to satisfy regulations regarding X-ray radiation. Should replacement be required, replace only with the value originally used.
- When replacing components identified by ◪, make the necessary adjustments indicated. If results do not meet the specified value, change the component identified by ⋈ and repeat the adjustment until the specified value is achieved (refer to Safety Related Adjustments on page 20).
- When replacing parts shown in the table below, be sure to perform the related adjustments.

- All voltages are in Volts

- Voltage is DC with respect to ground unless otherwise noted.
- Readings are taken with a 10MΩ digital multimeter.
- Readings are taken with a color-bar signal input.
- Voltage variations may be noted due to normal production tolerance.
- Circled numbers are waveform references.
- * : cannot be measured
- ▬▬ : B + Line
- - - - - : B – Line
- ⇨ : Signal path

Reference Information

RESISTOR	:	RN	METAL FILM
	:	RC	SOLID
	:	FPRD	NON FLAMMABLE CARBON
	:	FUSE	NON FLAMMABLE FUSIBLE
	:	RW	NON FLAMMABLE WIREWOUND
	:	RS	NON FLAMMABLE METAL OXIDE
	:	RB	NON FLAMMABLE CEMENT
	:	❋	ADJUSTMENT RESISTOR
COIL	:	LF-8L	MICRO INDUCTOR
CAPACITOR	:	TA	TANTALUM
	:	PS	STYROL
	:	PP	POLYPROPYLENE
	:	PT	MYLAR
	:	MPS	METALIZED POLYESTER
	:	MPP	METALIZED POLYPROPYLENE
	:	ALB	BIPOLAR
	:	ALT	HIGH TEMPERATURE
	:	ALR	HIGH RIPPLE

Note:

The components identified by shading and △ mark are critical for safety. Replace only with the part number specified.
The symbol ▭ (displayed on component side of the circuit board) indicates fast operating fuse. Replace only with fuse of the same rating as marked.

Les composants identifiés per un tramé et une marque △ sont critiques pour la sécurité. Ne les remplacer que par une piéce portant le numéro spécifié. Le symbole ▭ indique une fusible a action rapide. Doit etre remplacee par une fusible de meme valeur, comme marque.

A BOARD IC BLOCK DIAGRAMS

A BOARD: IC401 TDA7057AQ/N2 (KV-27FS12/27FS16 ONLY)

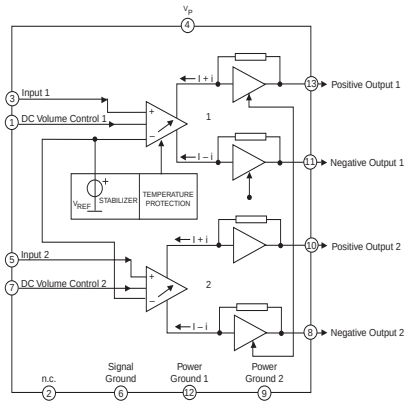

A BOARD: IC502 TDA8172

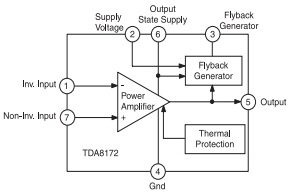

A BOARD: IC402 TDA8580Q/N1 (KV-29FS12/29FS12C ONLY)

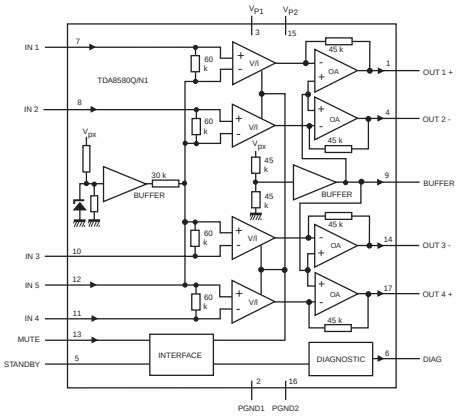

Downloaded from www.Manualslib.com manuals search engine

A

[POWER SUPPLY, DEFLECTION, TUNER/IF, AUDIO, MTS]

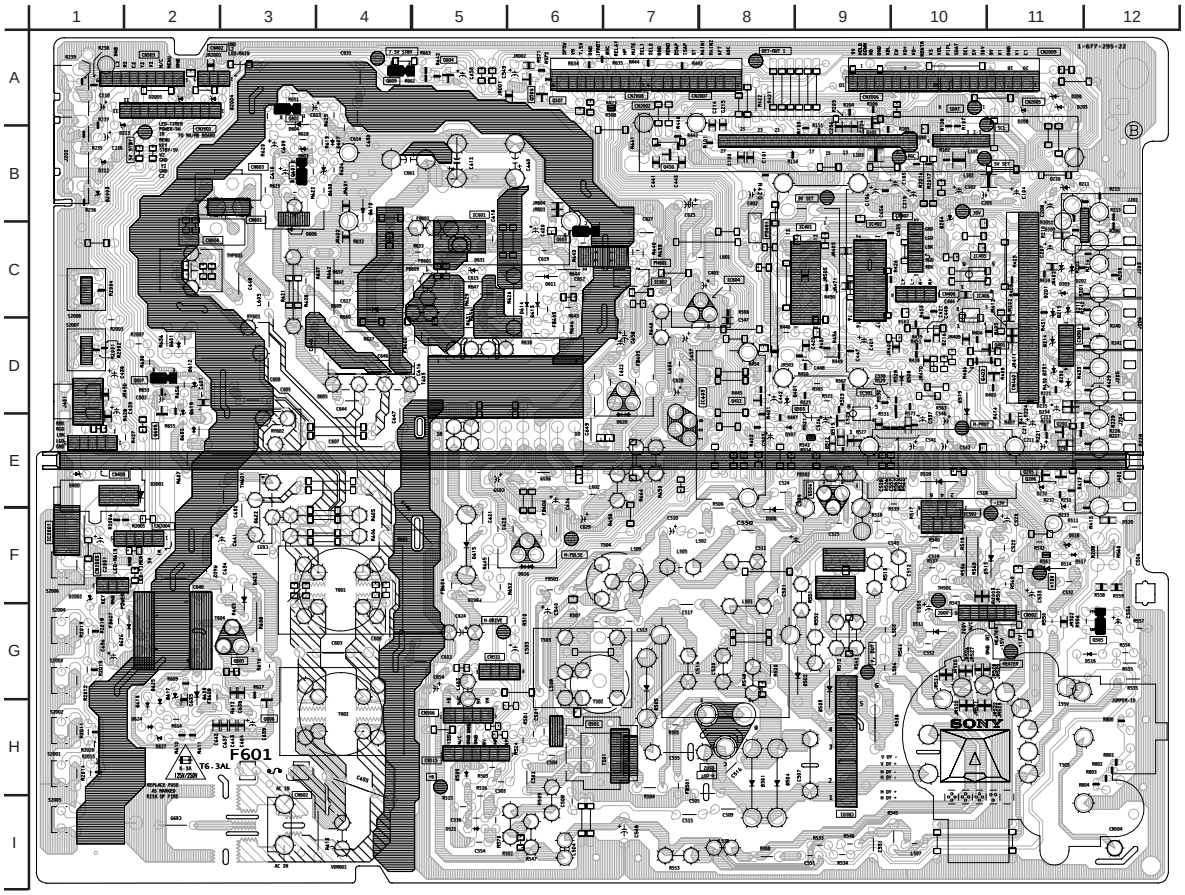

A BOARD LOCATOR LIST

DIODE		D604	B3	TRANSISTOR	
D204	B10	D605	D4	Q101	A9
D208	A11	D606	C3	Q410	B7
D209	C11	D607	B4	Q411	D8
D210	B11	D608	B3	Q501	H7
D211	C11	D609	C4	Q502	H7
D212	B1	D610	B4	Q503	D9
D213	B1	D611	C6	Q504	E9
D214	D11	D612	D2	Q505	G12
D215	C11	D613	C6	Q506	A6
D230	D11	D614	C6	Q507	A6
D231	D11	D615	F5	Q601	B3
D232	E11	D616	F6	Q602	A3
D233	E11	D617	H2	Q603	C6
D401	D8	D618	H2	Q604	A5
D501	H8	D619	D2	Q605	G3
D502	G9	D620	D7	Q606	H3
D503	G9	D622	F3	Q607	D2
D504	H8	D623	G2	Q608	D2
D505	G7	D624	G5	Q609	A4
D506	F8	D625	H2		
D507	E8	D626	G1		
D508	D9	D627	H2		
D509	H5	D628	H2		
D510	E10	D2001	E2		
D511	G10	D2002	F1		
D512	E9	D2003	B1		
D513	F10	D2004	A2		
D514	F11	D2005	A2		
D515	E9	IC			
D516	G11	IC401	C9		
D517	F11	IC402	B9		
D518	F11	IC501	D9		
D519	D10	IC502	F10		
D520	F12	IC601	B5		
D521	I5	IC602	C7		
D522	E9	IC603	D7		
D601	D2	IC604	C8		
D602	E2	IC2001	E1		
D603	B3				

Downloaded from www.Manualslib.com manuals search engine

A BOARD SCHEMATIC DIAGRAM

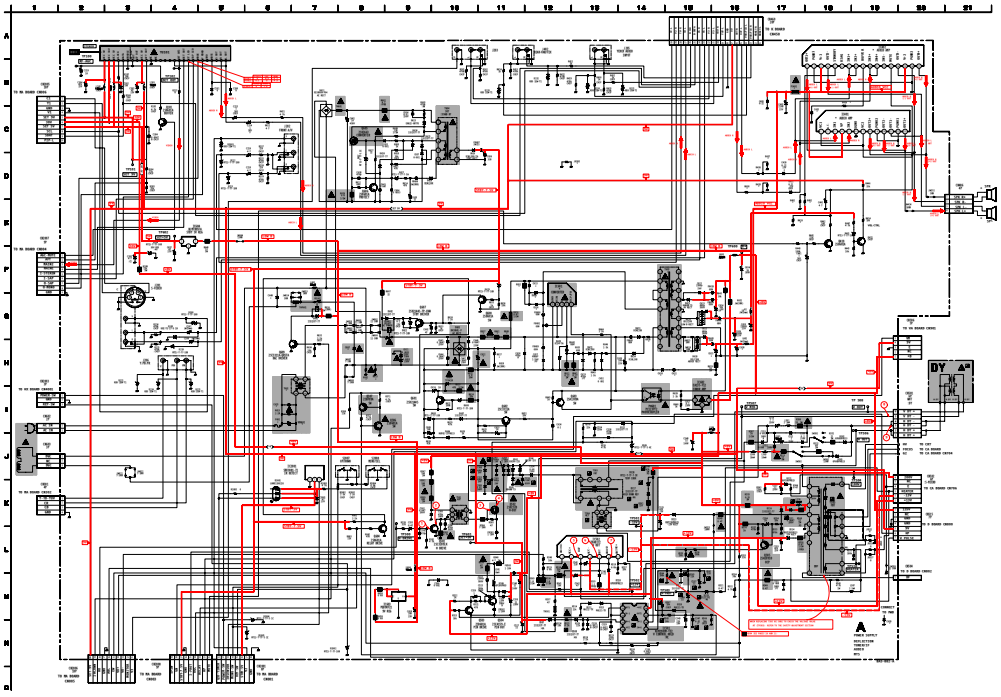

A BOARD MARK (*) LIST

REF NO.	LOC	KV-27FS12 KV-27FS16	KV-29FS12 KV-29FS12C
C426	B16	#	22UF 25V
C607	H18	.47UF 125V	.47UF 300V
C612	H11	680UF 250V	560UF 400V
C615	F12	#	.022UF 400V
C616	G12	#	2200PF 1kV
C625	H18	1000UF 25V	15000UF 25V
C630	H15	4700 PF 250V	#
C631	H16	4700PF 250V	#
C548	G6	22UF 125V	22UF 300V
C805	I7	.47UF 125V	.47UF 300V
C858	H16	1000UF 25V	15000UF 25V
C869	L19	.0047UF 250V	#
D809	G12	#	RU-1P
F801	I6	6.3A/125V	6.3A/250V
IC401	C19	TDA7057 AQ/N2	#
IC402	A19	#	TDA8580Q/N1
IC901	F12	STR-F6625	STR-F6655
JR505	D13	0	#
JW607	H8	#	JW7.5MM)
JW608	H8	#	JW7.5MM)
JW609	G8	#	JW7.5MM)
JW610	G8	#	JW7.5MM)
PS401	B17	1-576-336-21	1-532-686-21
R401	D18	#	22K
R402	D18	#	10K
R420	B17	3.9K	#
R426	B19	#	22
R436	D14	10K	22K
R437	D15	10K	4.7K
R438	D14	10K	22K
R439	D14	10K	4.7K
R501	H9	4.7M 1/2W	#
R515	H9	#	8.2M
R527	H11	390K	270K
R531	F12	#	100K
R537	G11	JW(26MM)	5.6K
R538	G14	33	56
R560	G11	15K	5.6K
R562	G11	JW(26MM)	5.6K
T602	I6	1-429-617-11	1-428-717-11
T603	F15	1-433-806-11	1-433-807-11
VDR601	I7	1-803-585-11	1-803-967-11

Not Mounted

A BOARD TRANSISTOR VOLTAGE LIST

Q501		Q502		Q503		Q505	
pin	volt	pin	volt	pin	volt	pin	volt
B	0.0	B	-0.1	B	0.0	B	-23.6
C	5.6	C	110.0	C	0.0	C	-32.2
E	GND	E	GND	E	GND	E	-23.6

Q510		Q513		Q517		Q524		Q529	
pin	volt	pin	volt	pin	volt	pin	volt	pin	volt
B	0.0	B	0.2	B	0.0	B	0.1	B	0.0
C	5.2	C	-3.8	C	0.0	C	4.1	C	13.9
E	GND	E	0.0	E	0.0	E	GND	E	GND

Q511		Q514		Q521		Q526	
pin	volt	pin	volt	pin	volt	pin	volt
B	5.3	B	-0.1	B	-33.6	B	-38.1
C	GND	C	-6.5	C	-33.0	C	-35.3
E	5.2	E	0.0	E	-33.1	E	-35.3

All voltages are in V

Q601		Q605		Q602		Q607	
pin	volt	pin	volt	pin	volt	pin	volt
B	0.0	B	154.9	B	-32.8	B	0.7
C	93.3	C	1.8	C	-23.6	C	0.1
E	GND	E	135.5	E	-32.9	E	GND

A BOARD TRANSISTOR VOLTAGE LIST

Q605	
pin	volt
D	-35.8
G	40.8
S	36.8

All voltages are in V

A BOARD IC VOLTAGE LIST

IC401		IC402		IC502		IC601		IC602		IC603		TU101	
pin	volt	pin	volt	pin	volt	pin	volt	pin	volt	pin	volt	pin	volt
1	0.6	1	6.9	1	4.1	1	10.1	1	-32.7	1	13.3	1	5.1
2	0.0	2	6.8	2	5.2	2	14.0	2	-32.7	2	5.0	2	4.7
3	2.4	3	14.1	3	6.8	3	14.0	3	-23.8	3	GND	3	4.7
4	14.3	4	6.8	4	GND	4	-13.9	4	-23.8	4	5.5	4	4.9
5	2.4	5	4.3	5	0.2	5	0.2	5	0.0	5	2.1	5	4.9
6	0.0	6	NC	6	3.7	6	14.3	6	0.1	6	2.1	6	4.4
7	0.6	7	4.1	7	2.5	7	2.1	7	GND	7	0.0	7	0.0
8	6.9	8	4.1	8	GND	8	13.3	8	9.9	8	0.0	8	0.0
9	0.0	9	6.8	9	6.9	9	13.3	9	9.9	9	8.9	9	0.0
10	6.9	10	4.1	10	9.5	10	-31.8	10	8.6	10	4.1	10	4.5
11	6.9	11	4.1	11	10.1	11	-31.8	11	8.6	11	4.1	11	4.5
12	0.0	12	6.9	12	4.1	12	-32.2	12	13.3	12	30.7	12	4.7

All voltages are in V

A BOARD WAVEFORMS

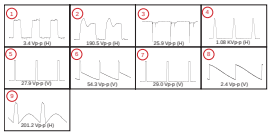

Downloaded from www.Manualslib.com manuals search engine

MA BOARD SCHEMATIC DIAGRAM

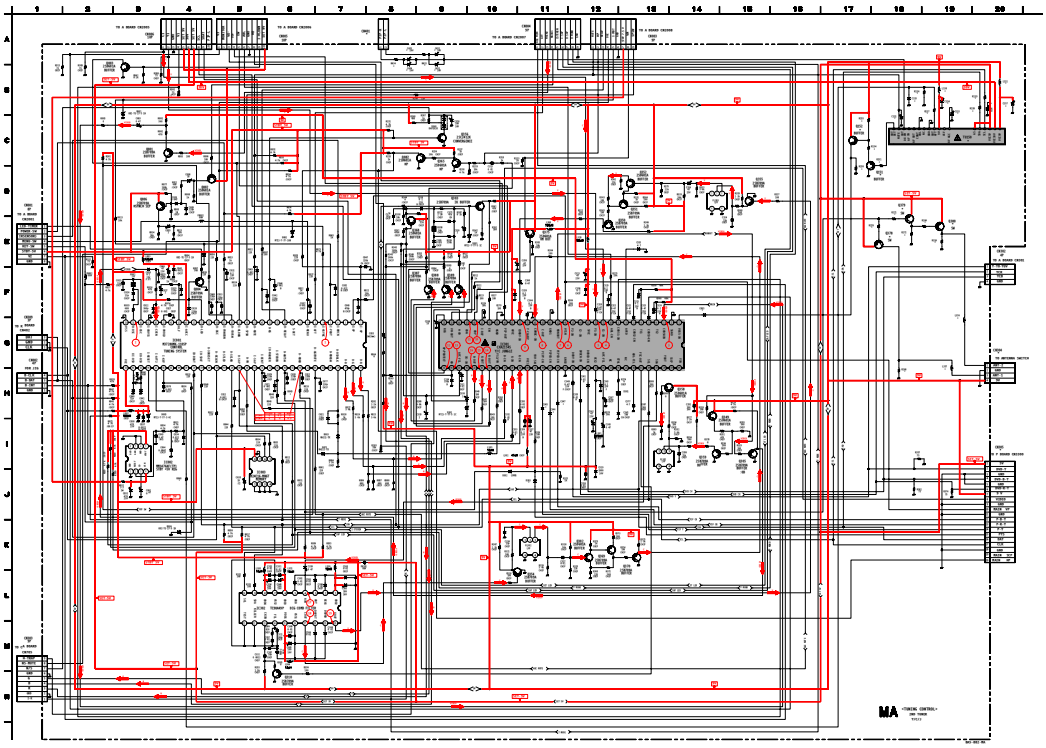

MA BOARD MARK (*) LIST

REF NO.	LOC.	KV-27FS12 KV-29FS12 KV-29FS12C	KV-27FS16
C005	F14	#	.47 UF 25V
C151	G18	#	1UF
C153	B18	#	.004TUF
C154	B19	#	47UF
C155	B19	#	10UF
C156	B20	#	47UF 25V
C157	B20	#	100UF
C345	H11	#	.01UF
C346	H11	#	.01UF
C347	H11	#	.01UF
C451	B9	#	1UF 16V
C452	A9	#	1UF 16V
C453	A9	#	1UF 16V
C454	B8	#	1UF 16V
CN304	G25	#	1-564-507-11
CN305	G5	#	1-573-298-21
CN401	A8	#	1-564-505-11
D303	J11	#	1SS133T-77
L150	B19	#	10UH
L151	B20	#	100UH
L356	G19	#	JW05AR0
L357	H18	#	JW05AR0
Q151	G18	#	2SB709A-QRS-TX
Q152	C17	#	2SD601A-QRS-TX
Q376	E18	#	2SB709A-QRS-TX
Q379	E18	#	2SA1309A-QRS-TA
Q380	E19	#	2SB709A-QRS-TX
R048	J4	#	100
R069	H6	#	220
R150	D17	#	1.5K
R151	D18	#	100
R154	C17	#	560
R155	C17	#	560
R156	B19	#	33K
R157	B19	#	22K
R158	B20	#	100
R159	B20	#	100
R264	E19	#	22K
R266	H18	#	22K
R270	E18	#	22K
R271	D18	#	22K
R272	E18	#	22K
R314	E18	#	22K
R434	A8	#	4.7K
R435	A9	#	4.7K
TU150	C18	#	FS1 BTF-FAM02

Not Mounted

MA BOARD WAVEFORMS

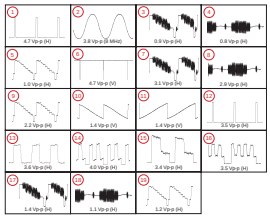

MA BOARD TRANSISTOR VOLTAGE LIST

Q001		Q002		Q005		Q052		Q269		Q275		Q369	
pin	volt	pin	volt	pin	volt	pin	volt	pin	volt	pin	volt	pin	volt
B	5.0	B	0.6	B	4.4	B	2.5	B	2.1	B	5.0	B	1.9
C	GND	C	0.5	C	GND	C	7.8	C	GND	C	0.0	C	GND
E	5.6	E	GND	E	5.0	E	1.9	E	2.7	E	4.4	E	2.5

Q002		Q151		Q210		Q254		Q365		Q376		Q380	
pin	volt	pin	volt	pin	volt	pin	volt	pin	volt	pin	volt	pin	volt
B	4.4	B	4.0	B	4.8	B	2.5	B	0.5	B	4.3	B	2.0
C	0.0	C	GND	C	GND	C	GND	C	3.8	C	4.9	C	GND
E	3.8	E	4.6	E	5.4	E	3.2	E	0.0	E	5.1	E	2.6

All voltage are V

Q003		Q152		Q248		Q255		Q268		Q279	
pin	volt	pin	volt	pin	volt	pin	volt	pin	volt	pin	volt
B	0.6	B	6.6	B	4.4	B	0.0	B	2.4	B	4.4
C	0.0	C	9.0	C	9.0	C	GND	C	9.0	C	5.1
E	GND	E	6.2	E	3.8	E	3.0	E	2.4	E	5.1

Q004		Q202		Q250		Q256		Q349		Q380	
pin	volt	pin	volt	pin	volt	pin	volt	pin	volt	pin	volt
B	4.9	B	2.5	B	4.0	B	0.5	B	7.6	B	5.1
C	GND	C	7.6	C	GND	C	1.2	C	5.8	C	0.0
E	3.9	E	1.9	E	4.7	E	GND	E	6.3	E	5.1

Q006		Q203		Q251		Q258		Q370		Q387	
pin	volt	pin	volt	pin	volt	pin	volt	pin	volt	pin	volt
B	5.2	B	3.6	B	7.8	B	2.4	B	5.8	B	1.9
C	0.7	C	0.1	C	4.0	C	8.9	C	GND	C	GND
E	5.0	E	3.5	E	8.4	E	1.8	E	6.4	E	2.5

Downloaded from www.Manualslib.com manuals search engine

MA [TUNING CONTROL, 2ND TUNER, Y/C/J]

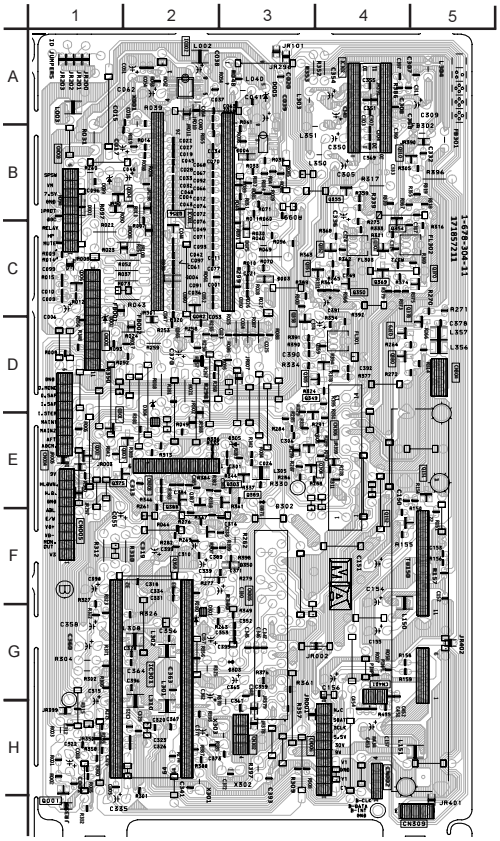

MA BOARD IC VOLTAGE LIST

IC001		18	0.1	37	3.1	56	1.0	IC003		8	3.4	27	2.4	46	4.3	IC302		18	3.2	15	GND
pin	volt	19	4.3	38	5.0	57	NC	pin	volt	9	4.8	28	3.5	47	5.2	pin	volt	19	1.9	16	NC
1	0.5	20	0.1	39	NC	58	0.1	1	GND	10	1.7	29	3.5	48	5.2	1	5.0	20	2.4	17	GND
2	4.8	21	NC	40	NC	59	NC	2	GND	11	0.0	30	5.9	49	GND	2	1.4	TU101		18	NC
3	NC	22	5.0	41	NC	60	NC	3	GND	12	4.8	31	5.5	50	4.8	3	3.2	pin	volt	19	NC
4	5.0	23	NC	42	4.8	61	0.1	4	GND	13	8.9	32	7.6	51	5.2	4	2.4	1	9.0	20	2.0
5	0.0	24	5.0	43	4.8	62	0.1	5	4.8	14	NC	33	3.6	52	5.2	5	1.9	2	3.0	21	0.3
6	0.0	25	2.1	44	NC	63	0.1	6	4.8	15	NC	34	2.3	53	9.0	6	5.0	3	5.0	22	4.0
7	2.4	26	NC	45	4.8	64	0.1	7	GND	16	4.8	35	2.3	54	5.3	7	0.0	4	4.8		
8	4.4	27	0.3	46	NC	IC002		8	5.0	17	4.4	36	3.9	55	1.6	8	5.0	5	4.8		
9	NC	28	2.2	47	4.8	pin	volt	IC301		18	GND	37	1.9	56	1.7	9	4.8	6	5.1		
10	NC	29	GND	48	0.1	1	GND	pin	volt	19	NC	38	1.9	57	1.1	10	4.8	7	NC		
11	0.1	30	2.2	49	0.1	2	5.0	1	5.9	20	6.4	39	2.0	58	7.2	11	0.0	8	NC		
12	NC	31	2.3	50	5.0	3	4.9	2	GND	21	3.9	40	0.0	59	4.8	12	0.0	9	NC		
13	0.5	32	GND	51	5.0	4	7.2	3	5.2	22	5.6	41	4.6	60	4.8	13	2.6	10	NC		
14	NC	33	5.0	52	NC	5	5.0	4	5.0	23	8.9	42	4.6	61	4.8	14	2.1	11	7.5		
15	0.1	34	2.5	53	1.0	6	GND	5	4.8	24	5.7	43	4.6	62	NC	15	5.0	12	NC		
16	0.1	35	2.5	54	0.1	7	GND	6	5.0	25	GND	44	8.9	63	NC	16	0.0	13	9.0		
17	0.0	36	5.0	55	NC	8	NC	7	4.8	26	3.5	45	0.2	64	NC	17	2.5	14	5.3		

All voltages are in V

MA BOARD IC BLOCK DIAGRAMS

MA BOARD: IC301 CXA2154S

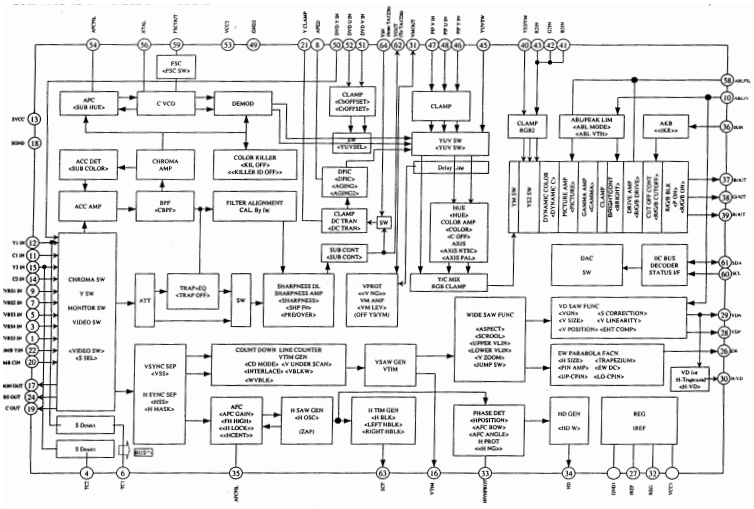

MA BOARD LOCATOR LIST

DIODE		D005	A-3	D305	E-2	IC003	B-3	Q002	E-1	Q151	E5	Q310	B-4	Q354	C-4	Q365	D-2	Q378	C4	Q389	E-3
D001	B-1	D006	B-3	D360	D-2	IC301	G-2	Q003	E-1	Q152	F4	Q349	D-3	Q355	B-4	Q368	F-2	Q379	D4	CRYSTAL	
D002	C-1	D075	C-3	IC		IC302	A-4	Q004	B-1	Q302	C-4	Q350	C-4	Q356	C-2	Q369	C-4	Q380	D4	X001	A-2
D003	C-3	D301	F-2	IC001	B-2	TRANSISTOR		Q006	C-1	Q303	E-2	Q351	C-3	Q358	D-3	Q370	C-4	Q387	E-2	X301	H-2
D004	C-2	D303	G3	IC002	A-2	Q001	H-1	Q082	C-2	Q305	D-3	Q352	C-3	Q359	D-3	Q375	E-2	Q388	E-2		

Downloaded from www.Manualslib.com manuals search engine

CA BOARD SCHEMATIC DIAGRAM

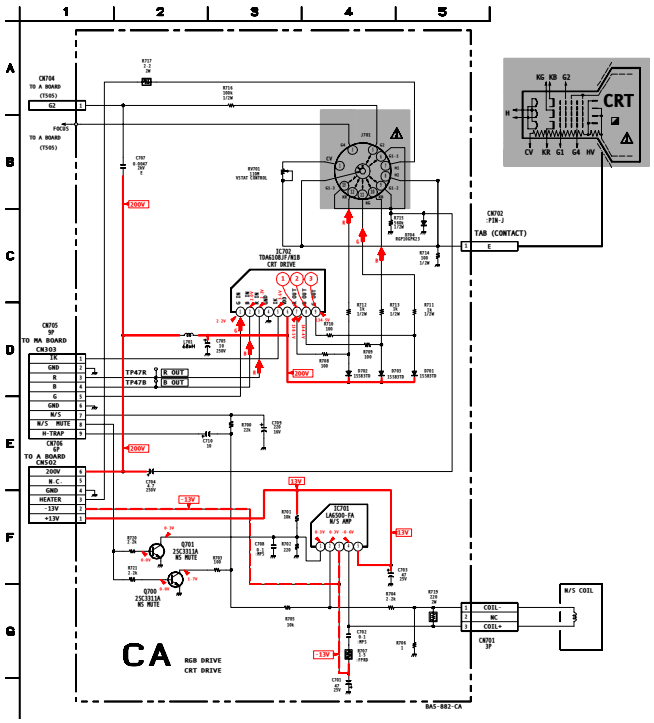

CA [RGB DRIVE, CRT DRIVE]

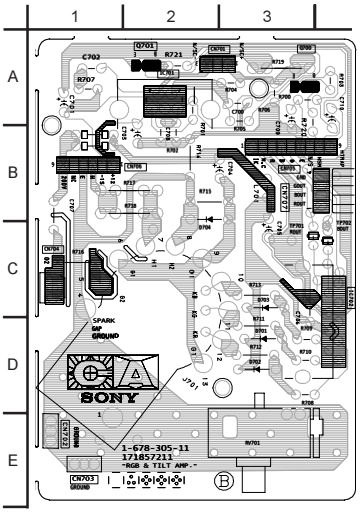

CA BOARD WAVEFORMS

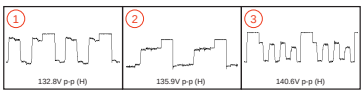

HX BOARD SCHEMATIC DIAGRAM

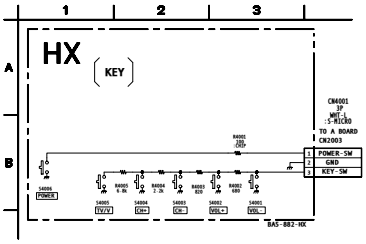

HX [KEY]

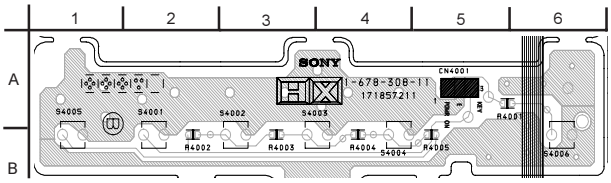

MA Board CA & HX Boards

Downloaded from www.Manualslib.com manuals search engine

D BOARD SCHEMATIC DIAGRAM

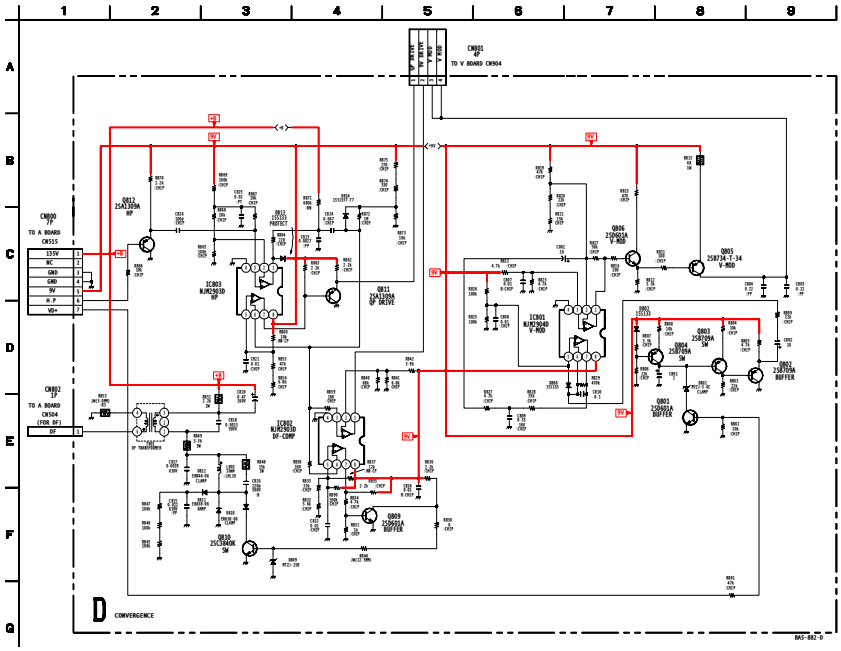

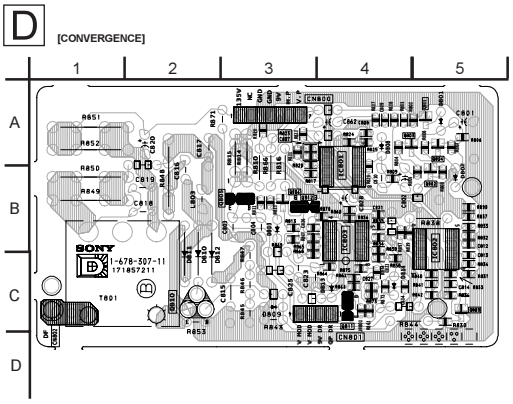

D BOARD TRANSISTOR VOLTAGE LIST

Q801		Q806	
pin	volt	pin	volt
B	-2.2	B	7.3
C	3.4	C	8.1
E	GND	E	6.7
Q802		**Q809**	
pin	volt	pin	volt
B	4.3	B	0.3
C	GND	C	0.3
E	4.9	E	GND
Q803		**Q810**	
pin	volt	pin	volt
B	6.4	B	0.3
C	4.3	C	1.2
E	7.0	E	GND
Q804		**Q811**	
pin	volt	pin	volt
B	7.4	B	6.3
C	6.4	C	GND
E	7.9	E	6.4
Q805		**Q812**	
pin	volt	pin	volt
B	6.7	B	0.0
C	0.6	C	GND
E	7.3	E	0.6

All voltages are in V

D BOARD IC VOLTAGE LIST

IC801		IC803	
pin	volt	pin	volt
1	7.3	1	2.3
2	4.4	2	4.3
3	4.5	3	4.7
4	GND	4	GND
5	4.5	5	7.6
6	4.5	6	6.7
7	4.5	7	6.0
8	9.0	8	9.0

All voltages are in V

IC802	
pin	volt
1	6.8
2	5.7
3	0.0
4	GND
5	6.8
6	6.7
7	3.2
8	9.0

Downloaded from www.Manualslib.com manuals search engine

K BOARD SCHEMATIC DIAGRAM

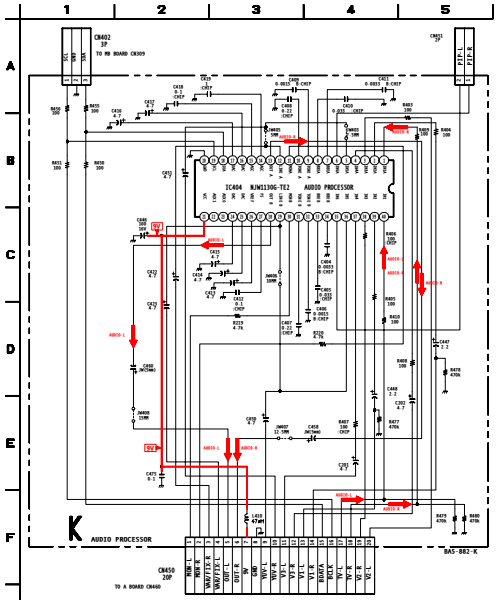

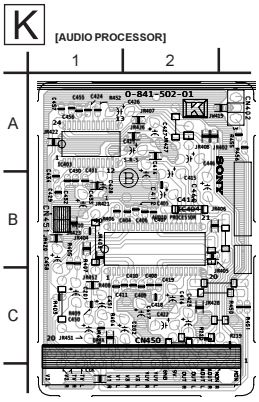

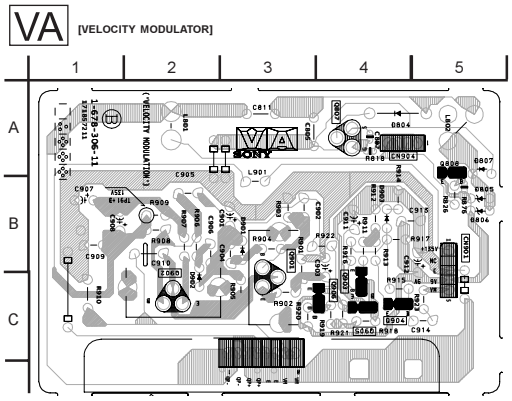

K BOARD IC VOLTAGES

IC404		6	NC	13	4.5	20	GND	27	3.9	34	4.5
pin	volt	7	4.7	14	1.0	21	8.9	28	4.5	35	NC
1	4.5	8	4.5	15	4.5	22	NC	29	4.5	36	4.5
2	4.5	9	4.5	16	0.9	23	NC	30	4.5	37	4.5
3	4.5	10	4.5	17	0.9	24	1.3	31	4.5	38	4.5
4	4.5	11	4.5	18	4.8	25	1.3	32	4.5	39	4.5
5	4.5	12	4.5	19	4.9	26	4.4	33	4.5	40	4.5

All voltages are in V

VA BOARD SCHEMATIC DIAGRAM

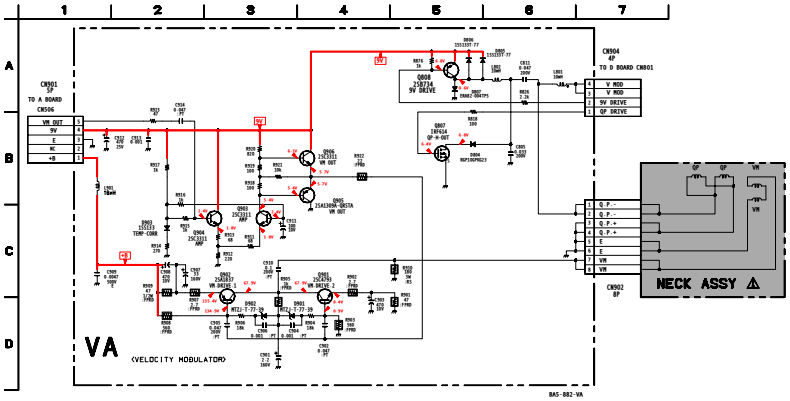

D Board K & VA Boards

Downloaded from www.Manualslib.com manuals search engine

P BOARD SCHEMATIC DIAGRAM

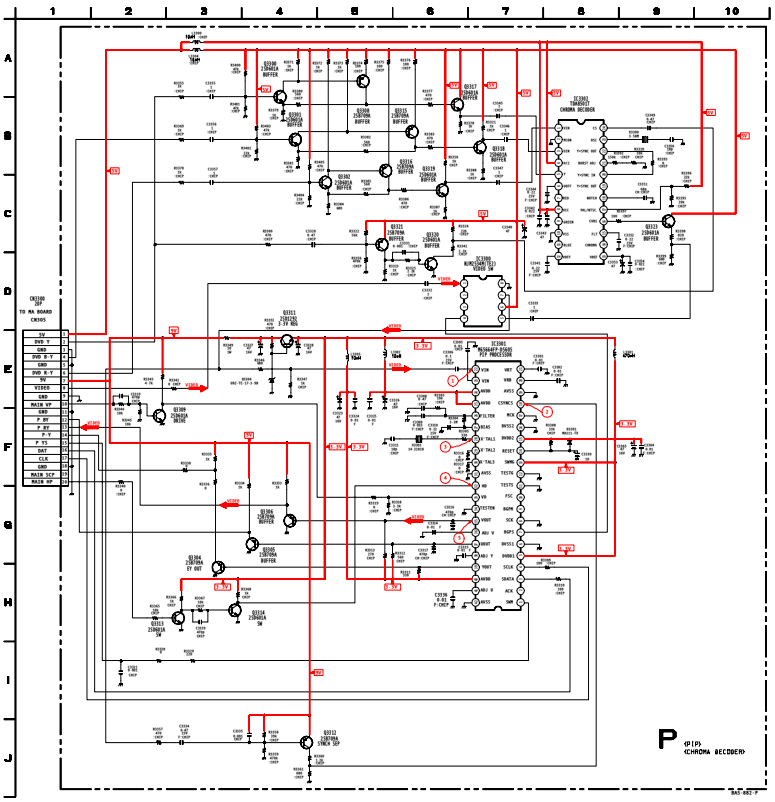

P [PIP, CHROMA DECODER]

COMPONENT SIDE

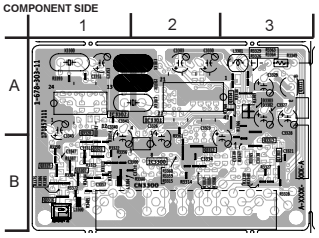

CONDUCTOR SIDE

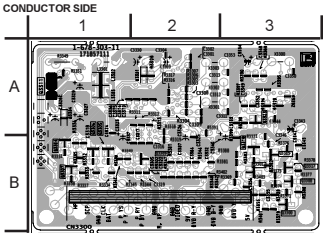

P BOARD IC VOLTAGE LIST

IC3300		29	0.0
pin	volt	30	0.0
1	2.6	31	0.0
2	0.0	32	0.5
3	2.6	33	0.0
4	0.0	34	0.0
5	2.6	35	3.1
6	5.0	36	1.1
7	1.8	37	3.0
8	0.0	38	1.2
IC3301		39	2.6
pin	volt	40	3.5
1	0.2	41	1.0
2	0.0	42	0.0
3	4.7	IC3302	
4	4.8	pin	volt
5	3.2	1	0.0
6	0.0	2	0.0
7	0.0	3	0.0
8	0.0	4	5.0
9	0.0	5	0.3
10	0.8	6	2.0
11	0.0	7	0.9
12	0.0	8	5.1
13	3.2	9	0.9
14	3.2	10	0.0
15	3.2	11	0.9
16	0	12	2.0
17	0	13	2.5
18	0.3	14	2.5
19	0.0	15	0.8
20	0.5	16	1.7
21	1.6	17	3.3
22	1.0	18	1.7
23	0.6	19	0.0
24	3.4	20	1.7
25	3.4	21	2.5
26	1.4	22	1.7
27	1.7	23	1.3
28	2.0	24	1.9

All voltages are in V

P BOARD TRANSISTOR VOLTAGE LIST

Q3300		Q3305		Q3311		Q3315		Q3319	
pin	volt	pin	volt	pin	volt	pin	volt	pin	volt
B	2.4	B	3.0	B	4.1	B	4.2	B	1.9
C	4.2	C	0.0	C	7.7	C	2.4	C	3.8
E	1.8	E	3.7	E	3.5	E	4.8	E	1.3
Q3301		Q3306		Q3312		Q3316		Q3320	
pin	volt	pin	volt	pin	volt	pin	volt	pin	volt
B	1.6	B	3.1	B	8.8	B	0.0	B	0.0
C	4.2	C	0.0	C	0.7	C	1.9	C	5.0
E	1.0	E	3.8	E	9.0	E	4.9	E	0.0
Q3302		Q3308		Q3313		Q3317		Q3321	
pin	volt	pin	volt	pin	volt	pin	volt	pin	volt
B	1.6	B	4.2	B	0.2	B	2.9	B	4.7
C	4.3	C	2.9	C	2.7	C	5.0	C	0.0
E	1.0	E	4.9	E	0.0	E	2.3	E	5.0
Q3304		Q3309		Q3314		Q3318		Q3323	
pin	volt	pin	volt	pin	volt	pin	volt	pin	volt
B	2.6	B	0.7	B	0.5	B	2.4	B	1.8
C	0.0	C	0.0	C	0.6	C	3.3	C	5.0
E	3.3	E	0.0	E	0.0	E	1.8	E	1.1

All voltages are in V

P BOARD WAVEFORMS

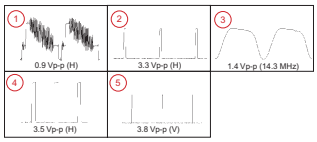

Downloaded from www.Manualslib.com manuals search engine

6-4. SEMICONDUCTORS

2SA1037AK-7146-QR
2SB709A-QRS-TX
2SD601A-QRS-TX
2SC2412K-T-146-QR

2SB734-7-34
2SC3209LK-TP

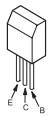

2SC1740S-QRT

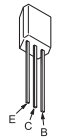

2SA1309A-QRSTA
2SC3311A-QRSTA
2SD2144S-TP-UVW

2SC3840K

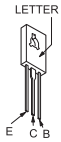

2SA1837
2SC4159-E

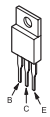

2SA1091O-TPE2
2SA993AS-QRT

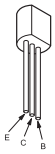

2SK2845-LB102

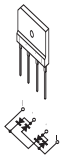

TF541M

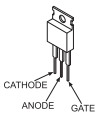

IRF614

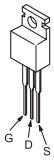

ERA38-06TP1
ERA82-004TP5
1SS133T-77
D1N2OR-TA
D1NS4-TA
MTZJ-T-7712C
MTZJ-T-77-33B
MTZJ-T-77-39

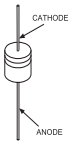

RU-1P
ERC06-15S
MTZJ-T-77-5.1C
MTZJ-T-775.6C
MTZJ-T-77-7.5A
MTZJ-T-77-10B
MTZJ-T-7730D
RD10ES-T1B
RGP10-GPKG3
RGP02-17PKG23

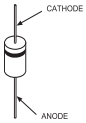

ERB44-06TP1
1SS83TD
D1NL2OU-TA
EL1Z-V1
ERA22-08TP3
GP08DPKG23
RGP10GPKG23
RU4AM-T3

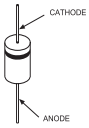

RD9.1EW-T1

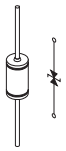

MA111-TX

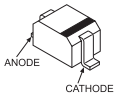

D2SB60A-F04

DAP202K-T-146

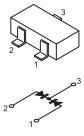

D4SB60L-F

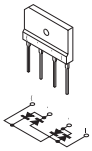

D5LC20U

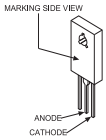

SECTION 7
EXPLODED VIEW

- Items with no part number and no description are not stocked because they are seldom required for routine service.
- The component parts of an assembly are indicated by the reference numbers in the remarks column.
- Items marked * are not stocked since they are seldom required for routine service. Some delay should be anticipated when ordering these items.

Note:

The components identified by shading and mark ⚠ are critical for safety. Replace only with part number specified.

Note:

Les composants identifies per un trame et une marque ⚠ sont critiques pour la securite. Ne les remplacer que par une piece portant le numero specifie.

7-1. CHASSIS (KV-29FS12/29FS12C ONLY)

● 7-685-648-79 SCREW +BVTP 3X12
■ 7-685-663-79 SCREW +BVTP 4X16
▲ 4-046-765-12 SCREW (7) TAPPING

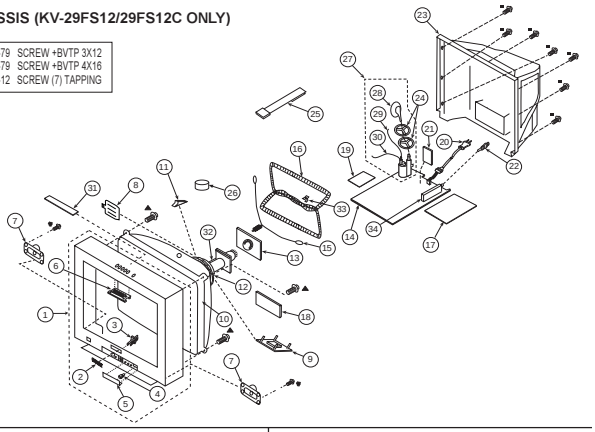

REF. NO.		PART NO.	DESCRIPTION	REMARK
1		X-4037-663-1	BEZNET ASSY	2-5
2		3-704-179-31	EMBLEM (NO.9), SONY	
3		4-075-657-01	GUIDE, LED	
4		4-047-464-01	CATCHER,PUSH	
5		4-075-658-01	DOOR	
6		4-068-982-02	MULTI-BUTTON (TOP)	
7		1-529-638-11	SPEAKER (6X12CM)	
8		2-163-920-01	PLATE, TLH CORRECTION	
9		1-452-896-11	COIL, NA ROTATION (RT200)	
10	⚠	8-735-052-05	CRT 29RSN(FOR EQUATORIAL AREA) (KV-29FS12C ONLY)	
10	⚠	8-735-041-05	CRT 29RSN (KV-29FS12 ONLY)	
11		4-053-005-01	SPACER, DY	
12	⚠	8-451-494-31	DY Y29RSA-S	
13		A-1332-063-A	CA (VAR) MOUNTED PC BOARD	
14		A-1299-221-A	A COMPLETE PC BOARD The high-voltage leads associated with the FBT on this board are not included and must be ordered separately. (See 28-30)	
15		4-036-329-01	SPRING (B), TENSION	
16	⚠	1-419-523-11	COIL, DEGAUSSING	
17		A-1304-200-A	MA (VAR) MOUNTED PC BOARD	
18		A-1342-550-A	VA (VAR) MOUNTED PC BOARD	
19		A-1343-875-A	D (VAR) MOUNTED PC BOARD	
20	⚠	1-769-796-31	CORD, POWER (WITH CONNECTOR) (KV-29F12C ONLY)	
20	⚠	1-790-315-21	CORD, AC POWER (WITH CONNECTOR) (KV-29FS12 ONLY)	
21		A-1380-627-A	K (VAR) MOUNTED PC BOARD	
22		1-766-374-11	PLUG, F-PIN	
23		4-075-652-01	COVER, REAR	
24		3-704-372-71	HOLDER, HV CABLE	
25		4-062-047-01	PIECE A(110), CONV CORRECT	
26		1-452-032-00	MAGNET,DISC	
27	⚠	1-453-310-11	FBT ASSY NX-4521/X4J4	28-30
28		1-251-374-13	HV CAP ASSY	
29		1-900-800-82	FOCUS LEAD	
30		1-900-803-22	G2 LEAD	
31		A-1372-817-A	HX MOUNTED PC BOARD	
32	⚠	8-453-011-11	NA299-M	
33		4-062-970-01	CLIP (29RSN), DGC	
34	⚠	8-598-431-30	TUNER, FSS BTF-WA411	

Downloaded from www.Manualslib.com manuals search engine

Note:

The components identified by shading and mark ⚠ are critical for safety. Replace only with part number specified.

Note:

Les composants identifies per un trame et une marque ⚠ sont critiques pour la securite. Ne les remplacer que par une piece portant le numero specifie.

7-2. CHASSIS (KV-27FS12/27FS16 ONLY)

● 7-685-648-79 SCREW +BVTP 3X12
■ 7-685-663-79 SCREW +BVTP 4X16
▲ 4-046-765-12 SCREW (7) TAPPING

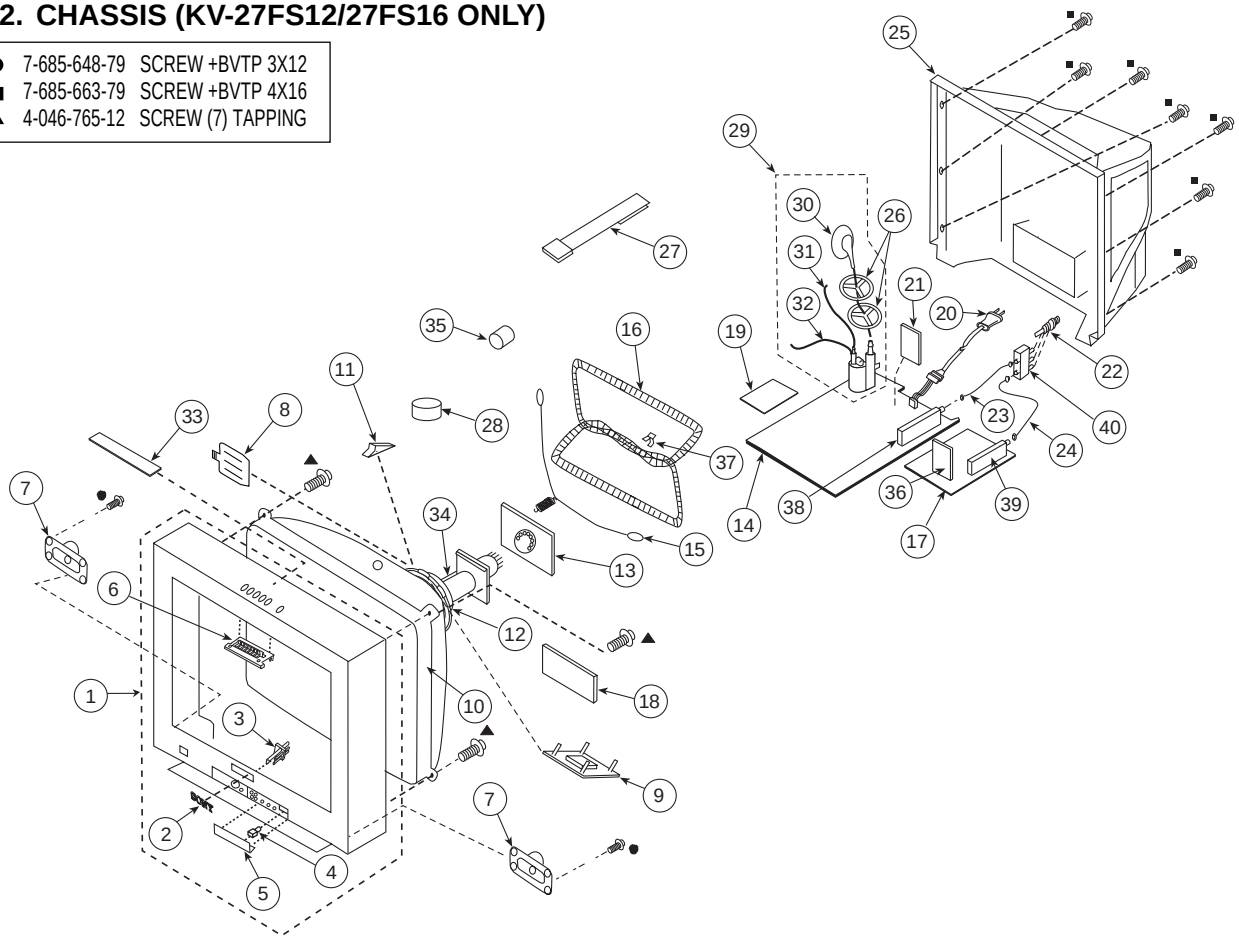

REF. NO.		PART NO.	DESCRIPTION	REMARK
1		X-4037-663-1	BEZNET ASSY	2-5
2		3-704-179-31	EMBLEM (NO.9), SONY	
3		4-075-657-01	GUIDE, LED	
4		4-047-464-01	CATCHER, PUSH	
5		4-075-658-01	DOOR	
6		4-068-982-02	MULTI-BUTTON (TOP)	
7		1-529-498-11	SPEAKER (13.1X6.2CM)	
8		2-163-920-01	PLATE, TLH CORRECTION	
9		1-452-896-11	COIL, NA ROTATION (RT200)	
10	⚠	8-735-041-05	CRT 29RSN	
11		4-053-005-01	SPACER, DY	
12	⚠	8-451-494-31	DY Y29RSA-S	
13	*	A-1332-063-A	CA (VAR) MOUNTED PC BOARD	
14		A-1299-222-A	A COMPLETE PC BOARD	
		The high-voltage leads associated with the FBT on this board are not included and must be ordered separately. (See 30-32)		
15		4-036-329-01	SPRING (B), TENSION	
16	⚠	1-419-156-21	COIL, DEGAUSSING	
17	*	A-1304-198-A	MA (VAR) MOUNTED PC BOARD (KV-27FS16 ONLY)	
17	*	A-1304-200-A	MA (VAR) MOUNTED PC BOARD (KV-27FS12 ONLY)	
18	*	A-1342-550-A	VA (VAR) MOUNTED PC BOARD	

REF. NO.		PART NO.	DESCRIPTION	REMARK
19	*	A-1343-875-A	D (VAR) MOUNTED PC BOARD	
20	⚠	1-792-874-11	CORD, POWER (WITH CONNECTOR)	
21	*	A-1380-627-A	K (VAR) MOUNTED PC BOARD	
22		1-766-374-11	PLUG, F-PIN (KV-27FS16 ONLY)	
23	*	1-557-056-31	CABLE, P-P (KV-27FS16 ONLY)	
24	*	1-783-800-11	CABLE, PIN (KV-27FS16 ONLY)	
25		4-075-652-01	COVER, REAR	
26		3-704-372-71	HOLDER, HV CABLE	
27		4-062-047-01	PIECE A(110), CONV CORRECT	
28		1-452-032-00	MAGNET,DISC	
29	⚠	1-453-310-11	FBT ASSY NX-4521/X4J4	30-32
30		1-251-374-13	HV CAP ASSY	
31		1-900-800-82	FOCUS LEAD	
32		1-900-803-22	G2 LEAD	
33	*	A-1372-817-A	HX MOUNTED PC BOARD	
34	⚠	8-453-011-11	NA299-M	
35		1-500-586-11	FILTER, CLAMP (FERRITE CORE)	
36	*	A-1190-367-A	P MOUNTED PC BOARD (KV-27FS16 ONLY)	
37	*	4-062-970-01	CLIP (29RSN), DGC	
38	⚠	8-598-431-30	TUNER, FSS BTF-WA411	
39	⚠	8-598-501-00	TUNER, FSS BTF-FA402 (KV-27FS16 ONLY)	
40		8-598-414-20	CHANGER, ANTENNA AS-2F	

Downloaded from www.Manualslib.com manuals search engine

SECTION 8
ELECTRICAL PARTS LIST

A

Note:

The components identified by shading and mark ⚠ are critical for safety. Replace only with part number specified.

Note:

Les composants identifies per un trame et une marque ⚠ sont critiques pour la securite. Ne les remplacer que par une piece portant le numero specifie.

The components identified by ⋈ in this manual have been carefully factory-selected for each set in order to satisfy regulations regarding X-ray radiation. Should replacement be required, replace only with the value originally used.

- Items marked * are not stocked since they are seldom required for routine service. Some delay should be anticipated when ordering these items.
- All variable and adjustable resistors have characteristic curve B, unless otherwise noted.

RESISTORS
- All resistors are in ohms
- F : nonflammable

When indicating parts by reference number, please include the board name.

A

*	A-1299-222-A	A COMPLETE PC BOARD (KV-27FS12/27FS16 ONLY)
*	A-1299-221-A	A COMPLETE PC BOARD (KV-29FS12/29FS12C ONLY)

The high voltage leads associated with the FBT on this board are not included and must be ordered separately. Order the following leads when requesting this A Board:

	1-251-374-13	HV CAP ASSY
	1-900-803-22	G2 LEAD
	1-900-800-82	FOCUS LEAD
	1-533-223-11	HOLDER, FUSE
*	4-374-846-11	COVER, CAPACITOR, CAP TYPE
	4-382-854-11	SCREW (M3X10), P, SW (+)
	4-382-854-11	SCREW (M3X10), P, SW (+)

CAPACITOR

REF. NO.		PART NO.	DESCRIPTION			REMARK
C100		1-216-295-91	SHORT			
C101		1-216-295-91	SHORT			
C102		1-126-933-11	ELECT	100µF	20%	16V
C104		1-126-941-11	ELECT	470µF	20%	25V
C105		1-104-664-11	ELECT	47µF	20%	25V
C204		1-163-017-00	CERAMIC CHIP	0.0047µF	10%	50V
C205		1-126-963-11	ELECT	4.7µF	20%	50V
C210		1-126-963-11	ELECT	4.7µF	20%	50V
C214		1-164-346-11	CERAMIC CHIP	1µF		16V
C215		1-164-346-11	CERAMIC CHIP	1µF		16V
C216		1-126-963-11	ELECT	4.7µF	20%	50V
C219		1-126-964-11	ELECT	10µF	20%	50V
C402		1-126-943-11	ELECT	2200µF	20%	25V
C403		1-126-957-11	ELECT	0.22µF	20%	50V
C420		1-164-222-11	CERAMIC CHIP	0.22µF		25V
C421		1-164-222-11	CERAMIC CHIP	0.22µF		25V
C435		1-164-222-11	CERAMIC CHIP (KV-29FS12/29FS12C ONLY)	0.22µF		25V
C441		1-164-346-11	CERAMIC CHIP	1µF		16V
C442		1-126-963-11	ELECT	4.7µF	20%	50V
C501		1-102-114-00	CERAMIC	470PF	10%	50V
C502		1-106-383-00	MYLAR	0.047µF	10%	200V
C503		1-102-228-00	CERAMIC	470PF	10%	500V
C504		1-102-228-00	CERAMIC	470PF	10%	500V
C505	⚠	1-162-116-00	CERAMIC	680PF	10%	2KV
C506		1-162-318-11	CERAMIC	0.001µF	10%	500V
C507	⚠	1-117-717-11	FILM	17000PF	3%	1.2KV
C508	⚠	1-137-150-11	MYLAR	0.01µF	10%	100V
C509	⚠	1-162-116-00	CERAMIC	680PF	10%	2KV
C510		1-107-649-11	ELECT	2.2µF	20%	250V
C511		1-115-522-11	FILM	1µF	5%	250V
C512	⚠	1-106-387-00	MYLAR	0.068µF	10%	200V
C513		1-106-343-00	MYLAR	0.001µF	10%	100V
C514		1-109-844-11	FILM	0.68µF	5%	250V
C515	⚠	1-162-116-00	CERAMIC	680PF	10%	2KV
C520	⚠	1-129-722-00	FILM	0.047µF	5%	630V
C521		1-164-646-11	CERAMIC	2200PF	10%	500V
C523		1-126-941-11	ELECT	470µF	20%	25V
C524		1-102-244-00	CERAMIC	220PF	10%	500V
C525		1-107-612-11	CERAMIC	100PF	5%	500V
C526		1-126-960-11	ELECT	1µF	20%	50V
C527		1-126-965-11	ELECT	22µF	20%	50V
C528		1-164-161-11	CERAMIC CHIP	0.0022µF	10%	50V
C529		1-164-161-11	CERAMIC CHIP	0.0022µF	10%	50V
C530		1-164-161-11	CERAMIC CHIP	0.0022UF	10%	50V
C531		1-106-387-00	MYLAR	0.068µF	10%	200V
C533		1-126-941-11	ELECT	470µF	20%	25V
C534	⚠	1-126-964-11	ELECT	10µF	20%	50V
C535		1-126-959-11	ELECT	0.47µF	20%	50V
C536		1-102-228-00	CERAMIC	470PF	10%	500V
C537	⚠	1-126-965-11	ELECT	22µF	20%	50V
C539		1-107-662-11	ELECT	22µF	20%	250V
C540		1-107-645-11	ELECT	22UF	20%	160V
C541		1-126-969-11	ELECT	220µF	20%	50V
C542		1-126-967-11	ELECT	47µF	20%	50V
C543		1-136-169-00	MYLAR	0.22µF	5%	50V
C546	⚠	1-126-965-11	ELECT	22µF	20%	50V

Downloaded from www.Manualslib.com manuals search engine

A

Note:

The components identified by shading and mark ⚠ are critical for safety. Replace only with part number specified.

Note:

Les composants identifies per un trame et une marque ⚠ sont critiques pour la securite. Ne les remplacer que par une piece portant le numero specifie.

REF.NO.		PART NO.	DESCRIPTION	REMARK		
C547	⚠	1-163-031-11	CERAMIC CHIP	0.01µF		50V
C548		1-104-710-11	ELECT	22µF		160V
C549		1-126-934-11	ELECT	220µF	20%	16V
C550		1-107-846-11	FILM	0.1µF	5%	250V
C551	⚠	1-137-417-11	MYLAR	0.0047µF	10%	200V
C553		1-107-662-11	ELECT	22µF	20%	250V
C554		1-102-110-00	CERAMIC	220PF	10%	50V
C555	⚠	1-117-629-11	FILM	2700PF	3%	1.2KV
C601		1-164-004-11	CERAMIC CHIP	0.1µF	10%	25V
C602		1-126-967-11	ELECT	47µF	20%	50V
C604		1-164-182-11	CERAMIC CHIP	0.0033µF	10%	50V
C606	⚠	1-113-923-11	CERAMIC	0.0033µF	20%	250V
C607	⚠	1-136-311-11	MYLAR	0.47µF	20%	125V
			(KV-27FS12/27FS16 ONLY)			
C607	⚠	1-136-311-11	MYLAR	0.47µF	20%	300V
			(KV-29FS12/29FS12C ONLY)			
C609		1-126-968-11	ELECT	100µF	20%	50V
C610		1-126-964-11	ELECT	10µF	20%	50V
C611	⚠	1-113-923-11	CERAMIC	0.0033µF	20%	250V
C612	⚠	1-128-717-11	ELECT	680µF	20%	250V
			(KV-27FS12/27FS16 ONLY)			
C612	⚠	1-128-718-11	ELECT	560µF	20%	400V
			(KV-29FS12/29FS12C ONLY)			
C613		1-126-964-11	ELECT	10µF	20%	50V
C614		1-130-495-00	MYLAR	0.1µF	5%	50V
C615		1-130-202-00	FILM	0.022µF	10%	400V
			(KV-29FS12/29FS12C ONLY)			
C616		1-107-824-11	CERAMIC	220PF	5%	1KV
			(KV-29FS12/29FS12C ONLY)			
C617		1-125-893-11	FILM	680PF	3%	1100KV
C618		1-164-081-11	CERAMIC	470PF	10%	50V
C619		1-136-356-11	MYLAR	470PF	5%	50V
C620		1-104-665-11	ELECT	100µF	20%	25V
C621		1-125-772-91	CERAMIC	1500PF	10%	2KV
C622		1-164-625-11	CERAMIC	680PF	10%	500V
C623		1-164-625-11	CERAMIC	680PF	10%	500V
C624		1-131-867-51	ELECT	100µF		160V
C625		1-135-412-51	ELECT	1000µF	20%	25V
			(KV-27FS12/27FS16 ONLY)			
C625		1-135-573-51	ELECT	15000µF	20%	25V
			(KV-29FS12/29FS12C ONLY)			
C626		1-135-573-51	ELECT	15000µF	20%	25V
C627		1-136-189-00	MYLAR	0.1µF	10%	250V
C628		1-104-665-11	ELECT	100µF	20%	25V
C630		1-113-924-11	CERAMIC	0.0047µF	20%	250V
			(KV-27FS12/27FS16 ONLY)			
C631		1-113-924-11	CERAMIC	0.0047µF	20%	250V
			(KV-27FS12/27FS16 ONLY)			
C634		1-137-605-11	MYLAR	0.01µF	10%	250V
C635		1-163-009-11	CERAMIC CHIP	0.001µF	10%	50V
C636		1-126-970-11	ELECT	330µF	20%	50V

REF.NO.	PART NO.	DESCRIPTION	REMARK		
C637	1-163-009-11	CERAMIC CHIP	0.001µF	10%	50V
C638	1-163-005-11	CERAMIC CHIP	470PF	10%	50V
C639	1-126-965-11	ELECT	22µF	20%	50V
C641	1-107-679-91	ELECT	10µF	20%	450V
C643	1-104-760-11	CERAMIC CHIP	0.047µF	10%	50V
C644	1-161-964-91	CERAMIC	0.0047µF		250V
C645	1-161-964-91	CERAMIC	0.0047µF		250V
C646	1-161-964-91	CERAMIC	0.0047µF		250V
C647	1-161-964-91	CERAMIC	0.0047µF		250V
C648	1-136-346-21	MYLAR	0.22µF	20%	125V
		(KV-27FS12/27FS16 ONLY)			
C648	1-136-346-21	MYLAR	0.22µF	20%	300V
		(KV-29FS12/29FS12C ONLY)			
C652	1-130-471-00	MYLAR	0.001µF	5%	50V
C654	1-107-636-11	ELECT	10µF	20%	160V
C655 ⚠	1-136-311-11	MYLAR	0.47µF	20%	125V
		(KV-27FS12/27FS16 ONLY)			
C655 ⚠	1-136-311-11	MYLAR	0.47µF	20%	300V
		(KV-29FS12/29FS12C ONLY)			
C657	1-104-664-11	ELECT	47µF	20%	25V
C658	1-135-412-51	ELECT	1000µF	20%	25V
		(KV-27FS12/27FS16 ONLY)			
C658	1-135-573-51	ELECT	15000µF	20%	25V
		(KV-29FS12/29FS12C ONLY)			
C659	1-135-573-51	ELECT	15000µF	20%	25V
C699	1-117-703-11	CERAMIC	0.0047µF	20%	250V
		(KV-27FS12/27FS16 ONLY)			
C2001	1-104-664-11	ELECT	47µF	20%	25V

CONNECTOR

CN301 *	1-564-507-11	PLUG, CONNECTOR 4P
CN406 *	1-564-507-11	PLUG, CONNECTOR 4P
CN460	1-573-298-21	CONNECTOR, BOARD TO BOARD 20P
CN501 *	1-580-798-11	CONNECTOR PIN (DY) 6P
CN502 *	1-564-509-11	PLUG, CONNECTOR 6P
CN504 *	1-508-784-21	PIN, CONNECTOR (5MM PITCH) 1P
CN506 *	1-564-508-11	PLUG, CONNECTOR 5P
CN515 *	1-564-510-11	PLUG, CONNECTOR 7P
CN602 *	1-580-843-11	PIN, CONNECTOR (POWER)
CN603 *	1-573-963-11	PIN, CONNECTOR (PC BOARD) 3P
CN2001*	1-564-511-11	PLUG, CONNECTOR 8P
CN2003*	1-564-506-11	PLUG, CONNECTOR 3P
CN2005*	1-764-333-11	PLUG, CONNECTOR 10P
CN2006*	1-764-333-11	PLUG, CONNECTOR 10P
CN2007*	1-564-512-11	PLUG, CONNECTOR 9P
CN2008*	1-564-512-11	PLUG, CONNECTOR 9P

Downloaded from www.Manualslib.com manuals search engine

A

Note:

The components identified by shading and mark ⚠ are critical for safety. Replace only with part number specified.

Note:

Les composants identifies per un trame et une marque ⚠ sont critiques pour la securite. Ne les remplacer que par une piece portant le numero specifie.

REF.NO.	PART NO.	DESCRIPTION	REMARK
	DIODE		
D204	8-719-982-22	DIODE MTZJ-T-77-30D	
D208	8-719-110-17	DIODE MTZJ-T-77-10B	
D209	8-719-977-22	DIODE UDZ-TE-17-9.1B	
D210	8-719-110-17	DIODE MTZJ-T-77-10B	
D211	8-719-108-12	DIODE RD9.1EW-T1	
D212	8-719-110-17	DIODE MTZJ-T-77-10B	
D213	8-719 -110-17	DIODE MTZJ-T-77-10B	
D214	8-719-108-12	DIODE RD9.1EW-T1	
D215	8-719-108-12	DIODE RD9.1EW-T1	
D230	8-719-108-12	DIODE RD9.1EW-T1	
D231	8-719-108-12	DIODE RD9.1EW-T1	
D232	8-719-108-12	DIODE RD9.1EW-T1	
D233	8-719-108-12	DIODE RD9.1EW-T1	
D401	8-719-110-17	DIODE MTZJ-T-77-10B	
D501	8-719-945-80	DIODE ERC06-15S	
D502	8-719-908-03	DIODE GP08DPKG23	
D503	8-719-908-03	DIODE GP08DPKG23	
D504	8-719-945-80	DIODE ERC06-15S	
D505	8-719-312-10	DIODE RU4AM-T3	
D506	8-719-302-43	DIODE RGP10GPKG3	
D507	8-719-991-33	DIODE 1SS133T-77	
D508	8-719-991-33	DIODE 1SS133T-77	
D509	8-719-109-89	DIODE MTZJ-T-77-5.6C	
D510	8-719-908-03	DIODE GP08DPKG23	
D511	8-719-302-43	DIODE RGP10GPKG23	
D512	8-719-073-01	DIODE MA111-TX	
D513	8-719-979-85	DIODE RGP15GPKG23	
D514	8-719-979-85	DIODE RGP15GPKG23	
D515	8-719-073-01	DIODE MA111-TX	
D516 ⚠	8-719-991-33	DIODE 1SS133T-77	
D517 ⚠	8-719-991-33	DIODE 1SS133T-77	
D518 ⚠	8-719-921-63	DIODE MTZJ-T-77-7100X	
D519 ⚠	8-719-302-43	DIODE EL1Z-V1	
D520 ⚠	8-719-073-01	DIODE MA111-TX	
D521	8-719-991-33	DIODE 1SS133T-77	
D522	8-719-991-33	DIODE 1SS133T-77	
D601	8-719-991-33	DIODE 1SS133T-77	
D602	8-719-991-33	DIODE 1SS133T-77	
D603	8-719-982-26	DIODE MTZJ-T-77-33B	
D604	8-719-028-72	DIODE RGP02-17PKG23	
D605 ⚠	8-719-510-53	DIODE D4SB60L-F	
D606 ⚠	8-719-108-18	DIODE TF541M	
D607	8-719-991-33	DIODE 1SS133T-77	
D608	8-719-110-53	DIODE MTZJ-T-77-20B	
D609	8-719-311-31	DIODE RU-1P (KV-29FS12/29FS12C ONLY)	
D610	8-719-510-02	DIODE D1NS4-TA	
D611	8-719-063-70	DIODE D1NL20U-TA	
D612	8-719-110-17	DIODE MTZJ-T-77-10B	
D613	8-719-063-70	DIODE D1NL20U-TA	
D614	8-719-063-70	DIODE D1NL20U-TA	
D615	8-719-312-10	DIODE RU4AM-T3	
D616	8-719-510-37	DIODE D5LC20U	
D617	8-719-110-31	DIODE MTZJ-T-77-12C	
D618	8-719-991-33	DIODE 1SS133T-77	
D619	8-719-110-17	DIODE MTZJ-T-77-10B	
D620	8-719-510-37	DIODE D5LC20U	
D622	8-719-077-76	DIODE D2SB60A-F04	
D623	8-719-948-45	DIODE ERA22-08TP3	
D624	8-719-991-33	DIODE 1SS133T-77	
D625	8-719-991-33	DIODE 1SS133T-77	
D626	8-719-063-70	DIODE D1NL20U-TA	
D627	8-719-110-03	DIODE MTZJ-T-77-7100A	
D628	8-719-510-48	DIODE D1N20R-TA	
D2001	8-719-070-80	DIODE LNK0120022G	
D2002	8-719-110-17	DIODE MTZJ-T-77-10B	
D2003	8-719-108-12	DIODE RD9.1EW-T1	
D2004	8-719-921-44	DIODE MTZJ-T-77-5.1C	
D2005	8-719-921-44	DIODE MTZJ-T-77-5.1C	
	FUSE		
F601 ⚠	1-576-193-11	FUSE 6.3A/125V (KV-27FS12/27FS16 ONLY)	
F601 ⚠	1-532-506-51	FUSE 6.3A/250V (KV-29FS12/29FS12C ONLY)	
	FERRITE BEAD		
FB501	1-410-397-21	FERRITE 1.1µH	
FB502	1-410-397-21	FERRITE 1.1µH	
FB503	1-410-397-21	FERRITE 1.1µH	
FB600	1-412-911-11	FERRITE 0µH	
FB601	1-412-911-11	FERRITE 0µH	
FB602	1-412-911-11	FERRITE 0µH	
FB603	1-412-911-11	FERRITE 0µH	
FB604	1-412-911-11	FERRITE 0µH	
FB605	1-412-911-11	FERRITE 0µH	
FB606	1-412-911-11	FERRITE 0µH	
FB609	1-412-911-11	FERRITE 0µH	
FB610	1-412-911-11	FERRITE 0µH	
	IC		
IC401	8-759-490-17	IC TDA7057AQ/N2 (KV-27FS12/27FS16 ONLY)	
IC402	8-759-573-40	IC TDA8580Q/N1 (KV-29FS12/29FS12C ONLY)	
IC501 ⚠	8-759-700-07	IC NJM2903M-TE2	
IC502	8-759-980-58	IC TDA8172	

Downloaded from www.Manualslib.com manuals search engine

A

Note:

The components identified by shading and mark ⚠ are critical for safety. Replace only with part number specified.

Note:

Les composants identifies per un trame et une marque ⚠ sont critiques pour la securite. Ne les remplacer que par une piece portant le numero specifie.

REF.NO.		PART NO.	DESCRIPTION	REMARK
IC601	⚠	8-749-015-61	IC STR-F6626 (KV-27FS12/27FS16 ONLY)	
IC601	⚠	8-749-014-48	IC STR-F6656 (KV-29FS12/29FS12C ONLY)	
IC602	⚠	8-749-016-47	IC EA135-F12	
IC603		8-759-198-03	IC PQ09RF21	
IC604		8-759-701-75	IC NJM7805FA	
IC2001		8-742-212-20	HYB IC SBX3081-71	

JACK

J201		1-794-119-11	TERMINAL BLOCK, S 4P	
J202		1-794-267-11	JACK, PIN 3P	
J203		1-794-118-11	JACK BLOCK, PIN 3P	
J205		1-794-116-11	JACK BLOCK, PIN 2P	
J206		1-794-117-11	JACK BLOCK, PIN 2P	
J402		1-794-116-11	JACK BLOCK, PIN 2P	

CHIP CONDUCTOR

JR001		1-216-295-91	SHORT	
JR002		1-216-295-91	SHORT	
JR403		1-216-295-91	SHORT	
JR405		1-216-295-91	SHORT (KV-29FS12/29FS12C ONLY)	
JR411		1-216-295-91	SHORT	
JR471		1-216-295-91	SHORT (KV-29FS12/29FS12C ONLY)	
JR472		1-216-295-91	SHORT	
JR502		1-216-295-91	SHORT	
JR503		1-216-295-91	SHORT	
JR505		1-216-295-91	SHORT (KV-27FS12/27FS16 ONLY)	
JR522		1-216-295-91	SHORT	
JR523		1-216-295-91	SHORT	
JR526		1-216-295-91	SHORT	
JR527		1-216-295-91	SHORT	

COIL

L101		1-412-029-11	INDUCTOR CHIP	10µH
L102		1-412-032-11	INDUCTOR CHIP	100µH
L103		1-412-029-11	INDUCTOR CHIP	10µH
L501		1-409-955-11	INDUCTOR	8mH
L502		1-412-552-11	INDUCTOR	2.2mH
L503		1-406-677-11	INDUCTOR	10mH
L504		1-412-533-21	INDUCTOR	47µH
L505		1-406-978-11	INDUCTOR	150µH
L506		1-406-677-11	INDUCTOR	10mH
L507		1-412-552-11	INDUCTOR	2.2mH
L510	⚠	1-412-528-11	INDUCTOR	18µH
L603		1-412-529-11	INDUCTOR	22µH
L604		1-412-525-31	INDUCTOR	10µH
L605		1-412-529-11	INDUCTOR	22µH

PHOTO COUPLER

PH601	⚠	8-749-010-64	PHOTO COUPLER PC123FY2	

IC LINK

PS401	⚠	1-576-336-21	LINK, IC (KV-27FS12/27FS16 ONLY)	
PS401	⚠	1-532-686-21	LINK, IC 2.7A/150V (KV-29FS12/29FS12C ONLY)	

TRANSISTOR

Q101		8-729-422-27	TRANSISTOR 2SD601A-QRS-TX	
Q410		8-729-422-27	TRANSISTOR 2SD601A-QRS-TX	
Q411		8-729-216-22	TRANSISTOR 2SB709A-QRS-TX	
Q501		8-729-140-50	TRANSISTOR 2SC3209LK-TP	
Q502	⚠	8-729-046-07	TRANSISTOR 2SD2578-YB	
Q503		8-729-422-27	TRANSISTOR 2SD601A-QRS-TX	
Q504		8-729-809-29	TRANSISTOR 2SC4159-E	
Q505	⚠	8-729-200-17	TRANSISTOR 2SA1091O-TPE2	
Q506	⚠	8-729-422-27	TRANSISTOR 2SD601A-QRS-TX	
Q507	⚠	8-729-216-22	TRANSISTOR 2SB709A-QRS-TX	
Q601		8-729-922-37	TRANSISTOR 2SD2144S-TP-UVW	
Q602		8-729-423-33	TRANSISTOR 2SC3311A-QRSTA	
Q603		8-729-119-76	TRANSISTOR 2SA1309A-QRSTA	
Q604		8-729-422-27	TRANSISTOR 2SD601A-QRS-TX	
Q605	⚠	8-729-046-40	TRANSISTOR 2SK2663	
Q606		8-729-422-27	TRANSISTOR 2SD601A-QRS-TX	
Q607		8-729-922-37	TRANSISTOR 2SD2144S-TP-UVW	
Q608		8-729-422-27	TRANSISTOR 2SD601A-QRS-TX	
Q609		8-729-423-33	TRANSISTOR 2SC3311A-QRSTA	

RESISTOR

R105		1-216-065-91	RES-CHIP	4.7K	5%	1/10W
R107		1-216-025-91	RES-CHIP	100	5%	1/10W
R108		1-216-025-91	RES-CHIP	100	5%	1/10W
R115		1-216-295-91	SHORT			
R201		1-216-113-00	RES-CHIP	470K	5%	1/10W
R202		1-216-113-00	RES-CHIP	470K	5%	1/10W
R204		1-216-081-00	RES-CHIP	22K	5%	1/10W
R205		1-216-085-00	RES-CHIP	33K	5%	1/10W
R208		1-215-924-00	METAL OXIDE	15K	5%	3W
R214		1-216-113-00	RES-CHIP	470K	5%	1/10W
R215		1-216-113-00	RES-CHIP	470K	5%	1/10W
R235		1-216-113-00	RES-CHIP	470K	5%	1/10W
R237		1-216-033-00	RES-CHIP	220	5%	1/10W

Downloaded from www.Manualslib.com manuals search engine

A

Note:

The components identified by shading and mark ⚠ are critical for safety. Replace only with part number specified.

Note:

Les composants identifies per un trame et une marque ⚠ sont critiques pour la securite. Ne les remplacer que par une piece portant le numero specifie.

REF.NO.		PART NO.	DESCRIPTION	REMARK		
R238		1-216-033-00	RES-CHIP	220	5%	1/10W
R239		1-216-113-00	RES-CHIP	470K	5%	1/10W
R401		1-216-080-00	RES-CHIP	20K	5%	1/10W
			(KV-29FS12/29FS12C ONLY)			
R402		1-216-073-00	RES-CHIP	10K	5%	1/10W
			(KV-29FS12/29FS12C ONLY)			
R411		1-249-417-11	CARBON	1K	5%	1/4W
R412		1-216-113-00	RES-CHIP	470K	5%	1/10W
R413		1-216-113-00	RES-CHIP	470K	5%	1/10W
R414		1-249-417-11	CARBON	1K	5%	1/4W
R420		1-216-073-00	RES-CHIP	10K	5%	1/10W
			(KV-27FS12/27FS16 ONLY)			
R421		1-249-425-11	CARBON	4.7K	5%	1/4W
R422		1-249-389-11	CARBON	4.7	5%	1/4W
R426		1-216-009-91	RES-CHIP	22	5%	1/10W
			(KV-29FS12/29FS12C ONLY)			
R429		1-216-113-00	RES-CHIP	470K	5%	1/10W
R430		1-216-049-91	RES-CHIP	1K	5%	1/10W
R431		1-216-049-91	RES-CHIP	1K	5%	1/10W
R433		1-216-113-00	RES-CHIP	470K	5%	1/10W
R436		1-216-073-00	RES-CHIP	10K	5%	1/10W
			(KV-27FS12/27FS16 ONLY)			
R436		1-216-081-00	RES-CHIP	22K	5%	1/10W
			(KV-29FS12/29FS12C ONLY)			
R437		1-216-073-00	RES-CHIP	10K	5%	1/10W
			(KV-27FS12/27FS16 ONLY)			
R437		1-216-065-91	RES-CHIP	4.7K	5%	1/10W
			(KV-29FS12/29FS12C ONLY)			
R438		1-216-073-00	RES-CHIP	10K	5%	1/10W
			(KV-27FS12/27FS16 ONLY)			
R438		1-216-081-00	RES-CHIP	22K	5%	1/10W
			(KV-29FS12/29FS12C ONLY)			
R439		1-216-073-00	RES-CHIP	10K	5%	1/10W
			(KV-27FS12/27FS16 ONLY)			
R439		1-216-065-91	RES-CHIP	4.7K	5%	1/10W
			(KV-29FS12/29FS12C ONLY)			
R440		1-216-097-91	RES-CHIP	100K	5%	1/10W
R441		1-216-081-00	RES-CHIP	22K	5%	1/10W
R442		1-216-025-91	RES-CHIP	100	5%	1/10W
R445		1-216-073-00	RES-CHIP	10K	5%	1/10W
R446		1-249-435-11	CARBON	33K	5%	1/4W
R447		1-216-065-91	RES-CHIP	4.7K	5%	1/10W
R454		1-216-025-91	RES-CHIP	100	5%	1/10W
R501		1-249-425-11	CARBON	4.7K	5%	1/4W
R502	⚠	1-216-455-21	METAL OXIDE	560	5%	2W
R503	⚠	1-249-425-11	CARBON	4.7K	5%	1/4W
R505		1-249-401-11	CARBON	47	5%	1/4W
R506	⚠	1-215-883-11	METAL OXIDE	33	5%	2W
R507	⚠	1-260-328-11	CARBON	1K	5%	1/2W
R508		1-247-863-91	CARBON	22K	5%	1/4W
R509	⚠	1-215-891-11	METAL OXIDE	680	5%	2W

REF.NO.		PART NO.	DESCRIPTION	REMARK		
R510		1-249-411-11	CARBON	330	5%	1/4W
R511		1-249-377-11	CARBON	0.47	5%	1/4W
R512		1-215-910-00	METAL OXIDE	68	5%	3W
R513	⚠	1-215-907-11	METAL OXIDE	22	5%	3W
R514		1-216-683-11	METAL CHIP	22K	0.50%	1/10W
R516		1-249-425-11	CARBON	4.7K	5%	1/4W
R517		1-215-445-00	METAL	10K	1%	1/4W
R518		1-249-427-11	CARBON	6.8K	5%	1/4W
R519		1-249-427-11	CARBON	6.8K	5%	1/4W
R520	⚠	1-215-884-11	METAL OXIDE	47	5%	2W
R521		1-249-413-11	CARBON	470	5%	1/4W
R522		1-249-417-11	CARBON	1K	5%	1/4W
R523		1-216-073-00	RES-CHIP	10K	5%	1/10W
R524		1-249-429-11	CARBON	10K	5%	1/4W
R525	⚠	1-208-804-11	METAL CHIP	8.2K	0.50%	1/10W
R526		1-208-814-91	METAL CHIP	22K	0.50%	1/10W
R528		1-215-429-00	METAL	2.2K	1%	1/4W
R529		1-216-109-00	RES-CHIP	330K	5%	1/10W
R530		1-216-077-91	RES-CHIP	15K	5%	1/10W
R532		1-215-437-00	METAL	4.7K	1%	1/4W
R533		1-215-457-00	METAL	33K	1%	1/4W
R534		1-215-458-00	METAL	36K	1%	1/4W
R535		1-249-441-11	CARBON	100K	5%	1/4W
R536	⚠	1-214-798-21	METAL	1.8	1%	1/2W
R537		1-249-401-11	CARBON	47	5%	1/4W
R538	⚠	1-215-889-00	METAL OXIDE	330	5%	2W
R539		1-249-385-11	CARBON	2.2	5%	1/4W
R540		1-215-445-00	METAL	10K	1%	1/4W
R541		1-249-429-11	CARBON	10K	5%	1/4W
R543		1-247-887-00	CARBON	220K	5%	1/4W
R544		1-249-377-11	CARBON	0.47	5%	1/4W
R545		1-215-873-00	METAL OXIDE	4.7K	5%	1W
R546	⚠	1-249-377-11	CARBON	0.47	5%	1/4W
R547		1-216-455-21	METAL OXIDE	560	5%	2W
R548		1-216-377-11	METAL OXIDE	4.7	5%	2W
R549	⚠	1-260-288-11	CARBON	0.47	5%	1/2W
R550	⚠	1-260-288-11	CARBON	0.47	5%	1/2W
R551		1-215-907-11	METAL OXIDE	22	5%	3W
R553	⚠	1-216-363-00	METAL OXIDE	0.33	5%	2W
R554	⚠	1-249-429-11	CARBON	10K	5%	1/4W
R555	⚠	1-247-895-91	CARBON	470K	5%	1/4W
R556	⚠	1-249-417-11	CARBON	1K	5%	1/4W
R557	⚠	1-247-895-91	CARBON	470K	5%	1/4W
R558	⚠	1-216-097-91	RES-CHIP	100K	5%	1/10W
R559	⚠	1-216-073-00	RES-CHIP	10K	5%	1/10W
R560	⚠	1-215-902-11	METAL OXIDE	47K	5%	1W
R561	⚠	1-249-406-11	CARBON	120	5%	1/4W
R562	⚠	1-208-808-11	METAL CHIP	12K	0.50%	1/10W
R563	⚠	1-247-863-91	CARBON	22K	5%	1/4W

Downloaded from www.Manualslib.com manuals search engine

A

Note:

The components identified by shading and mark ⚠ are critical for safety. Replace only with part number specified.

Note:

The components identified by ⋈ in this manual have been carefully factory-selected for each set in order to satisfy regulations regarding x-ray radiation. Should replacement be required, replace only with the value originally used.

REF.NO.		PART NO.	DESCRIPTION		REMARK	
⋈ R564	⚠	1-208-836-11	METAL CHIP	180K	0.50%	1/10W
R565	⚠	1-249-429-11	CARBON	10K	5%	1/4W
R566	⚠	1-216-073-00	RES-CHIP	10K	5%	1/10W
R567	⚠	1-216-073-00	RES-CHIP	10K	5%	1/10W
R568	⚠	1-215-882-00	METAL OXIDE	22	5%	2W
R569		1-214-798-21	METAL	1.8	1%	1/2W
R570		1-247-863-91	CARBON	22K	5%	1/4W
R571		1-216-065-91	RES-CHIP	4.7K	5%	1/10W
R572		1-216-065-91	RES-CHIP	4.7K	5%	1/10W
R601	⚠	1-219-513-11	CARBON (KV-27FS12/27FS16 ONLY)	4.7M	5%	1/2W
R602	⚠	1-249-389-11	CARBON	4.7	5%	1/4W
R603		1-215-485-00	METAL	470K	1%	1/4W
R607		1-215-859-00	METAL OXIDE	22	5%	1W
R608		1-240-205-11	CARBON	22M	5%	1/2W
R609		1-216-049-91	RES-CHIP	1K	5%	1/10W
R610		1-216-073-00	RES-CHIP	10K	5%	1/10W
R611		1-216-089-91	RES-CHIP	47K	5%	1/10W
R612		1-216-045-00	RES-CHIP	680	5%	1/10W
R613	⚠	1-219-512-11	CARBON	2.2M	5%	1/2W
R614		1-249-413-11	CARBON	470	5%	1/4W
R615	⚠	1-218-265-11	METAL (KV-29FS12/29FS12C ONLY)	8.2M	5%	1W
R616	⚠	1-260-302-51	CARBON	6.8	5%	1/2W
R617		1-216-009-91	RES-CHIP	22	5%	1/10W
R618		1-249-440-11	CARBON	82K	5%	1/4W
R619		1-249-437-11	CARBON	47K	5%	1/4W
R620		1-249-417-11	CARBON	1K	5%	1/4W
R621	⚠	1-240-251-11	CEMENTED	6.8	5%	10W
R622		1-249-441-11	CARBON	100K	5%	1/4W
R623	⚠	1-260-324-11	CARBON	470	5%	1/2W
R624	⚠	1-249-429-11	CARBON	10K	5%	1/4W
R625		1-249-437-11	CARBON	47K	5%	1/4W
R626	⚠	1-220-926-11	FUSIBLE	0.47	10%	1/2W
R627		1-215-483-00	METAL (KV-27FS12/27FS16 ONLY)	390K	1%	1/4W
R627		1-215-479-00	METAL (KV-29FS12/29FS12C ONLY)	270K	1%	1/4W
R630		1-249-421-11	CARBON	2.2K	5%	1/4W
R631		1-215-929-11	METAL OXIDE (KV-29FS12/29FS12C ONLY)	100K	5%	3W
R632	⚠	1-216-361-21	METAL OXIDE	0.22	5%	2W
R633		1-249-415-11	CARBON	680	5%	1/4W
R634		1-216-073-00	RES-CHIP	10K	5%	1/10W
R635		1-216-057-00	RES-CHIP	2.2K	5%	1/10W
R637	⚠	1-216-485-11	METAL OXIDE (KV-29FS12/29FS12C ONLY)	5.6K	5%	3W
R638		1-249-399-11	CARBON (KV-27FS12/27FS16 ONLY)	33	5%	1/4W
R638		1-249-402-11	CARBON (KV-29FS12/29FS12C ONLY)	56	5%	1/4W
R639		1-249-421-11	CARBON	2.2K	5%	1/4W
R640		1-249-417-11	CARBON	1K	5%	1/4W
R641	⚠	1-216-362-11	METAL OXIDE	0.27	5%	2W
R642		1-216-089-91	RES-CHIP	47K	5%	1/10W
R643		1-249-419-11	CARBON	1.5K	5%	1/4W
R644		1-247-843-11	CARBON	3.3K	5%	1/4W
R645		1-215-898-11	METAL OXIDE	10K	5%	2W
R646		1-249-419-11	CARBON	1.5K	5%	1/4W
R648		1-215-908-00	METAL OXIDE	33	5%	3W
R649		1-249-417-11	CARBON	1K	5%	1/4W
R650		1-216-387-11	METAL OXIDE	0.68	5%	3W
R651		1-249-429-11	CARBON	10K	5%	1/4W
R653		1-216-049-91	RES-CHIP	1K	5%	1/10W
R655		1-216-049-91	RES-CHIP	1K	5%	1/10W
R656		1-249-429-11	CARBON	10K	5%	1/4W
R658		1-216-387-11	METAL OXIDE	0.68	5%	3W
R659		1-215-857-11	METAL OXIDE	10	5%	1W
R660	⚠	1-215-924-00	METAL OXIDE (KV-27FS12/27FS16 ONLY)	15K	5%	3W
R660	⚠	1-216-485-11	METAL OXIDE (KV-29FS12/29FS12C ONLY)	5.6K	5%	3W
R661		1-216-057-00	RES-CHIP	2.2K	5%	1/10W
R662	⚠	1-216-485-11	METAL OXIDE (KV-29FS12/29FS12C ONLY)	5.6K	5%	3W
R663		1-216-081-00	RES-CHIP	22K	5%	1/10W
R2001		1-216-057-00	RES-CHIP	2.2K	5%	1/10W
R2002		1-216-053-00	RES-CHIP	1.5K	5%	1/10W
R2003		1-249-425-11	CARBON	4.7K	5%	1/4W
R2004		1-216-069-00	RES-CHIP	6.8K	5%	1/10W
R2005		1-216-295-91	SHORT			

RELAY

RY601	⚠	1-755-198-11	RELAY
RY602	⚠	1-755-266-11	RELAY, AC POWER

SWITCH

S2007	1-762-816-11	SWITCH, TACTILE
S2008	1-762-816-11	SWITCH, TACTILE

SWITCH

SW501	1-572-707-11	SWITCH, LEVER
SW502	1-572-707-11	SWITCH, LEVER

Downloaded from www.Manualslib.com manuals search engine

A CA

Note:

The components identified by shading and mark ⚠ are critical for safety. Replace only with part number specified.

Note:

Les composants identifies per un trame et une marque ⚠ sont critiques pour la securite. Ne les remplacer que par une piece portant le numero specifie.

REF.NO.		PART NO.	DESCRIPTION	REMARK
			TRANSFORMER	
T501	⚠	1-437-195-11	TRANSFORMER, HORIZONTAL DRIVE	
T503	⚠	1-426-981-11	TRANSFORMER, FERRITE (PMT)	
T504	⚠	1-431-693-11	TRANSFORMER, HORIZONTAL LINEAR	
T505	⚠	1-453-310-11	FBT ASSY NX-4521//X4J4	
T602	⚠	1-435-617-11	TRANSFORMER, LINE FILTER (KV-27FS12/27FS16 ONLY)	
T602	⚠	1-426-717-11	TRANSFORMER, LINE FILTER (LFT) (KV-29FS12/29FS12C ONLY)	
T603	⚠	1-433-806-11	TRANSFORMER, REGULAT (KV-27FS12/27FS16 ONLY)	
T603	⚠	1-433-807-11	TRANSFORMER, REGULAT (KV-29FS12/29FS12C ONLY)	
T604	⚠	1-431-852-11	TRANSFORMER, CONVERTER (SRT)	
			THERMISTOR	
TH501		1-800-193-00	THERMISTOR	
TH601	⚠	1-803-586-11	THERMISTOR, NTC	
			THERMISTOR	
THP601	⚠	1-803-540-11	THERMISTOR	
			TUNER	
TU101	⚠	8-598-431-30	TUNER, FSS BTF-WA411	
			VARISTOR	
VDR601	⚠	1-803-585-11	VARISTOR ENE271D-10A (KV-27FS12/27FS16 ONLY)	
VDR601	⚠	1-803-967-11	VARISTOR (ENE621D-14A) (KV-29FS12/29FS12C ONLY)	

CA

*	A-1332-063-A	CA (VAR) MOUNTED PC BOARD	
	4-382-854-11	SCREW (M3X10),P, SW (+)	

CAPACITOR

REF.NO.	PART NO.	DESCRIPTION			
C701	1-104-664-11	ELECT	47µF	20%	25V
C702	1-136-165-00	MYLAR	0.1µF	5%	50V
C703	1-104-664-11	ELECT	47µF	20%	25V
C704	1-107-651-11	ELECT	4.7µF	20%	250V
C705	1-107-652-11	ELECT	10µF	20%	250V
C707	1-162-114-00	CERAMIC	0.0047µF		2KV
C708	1-136-165-00	MYLAR	0.1µF	5%	50V
C709	1-126-934-11	ELECT	220µF	20%	16V
C710	1-126-964-11	ELECT	10µF	20%	50V

CONNECTOR

REF.NO.	PART NO.	DESCRIPTION
CN701 *	1-564-506-11	PLUG, CONNECTOR 3P
CN702	1-695-915-11	TAB (CONTACT)
CN704	1-695-915-11	TAB (CONTACT)
CN705 *	1-564-512-11	PLUG, CONNECTOR 9P
CN706 *	1-564-509-11	PLUG, CONNECTOR 6P

DIODE

REF.NO.	PART NO.	DESCRIPTION
D701	8-719-901-83	DIODE 1SS83TD
D702	8-719-901-83	DIODE 1SS83TD
D703	8-719-901-83	DIODE 1SS83TD
D704	8-719-302-43	DIODE RGP10GPKG23

IC

REF.NO.	PART NO.	DESCRIPTION
IC701	8-759-803-42	IC LA6500-FA
IC702	8-759-562-43	IC TDA6108JF/N1B

JACK

REF.NO.		PART NO.	DESCRIPTION
J701	⚠	1-451-470-21	SOCKET, CRT

COIL

REF.NO.	PART NO.	DESCRIPTION	
L701	1-408-613-31	INDUCTOR	68µH

TRANSISTOR

REF.NO.	PART NO.	DESCRIPTION
Q700	8-729-423-33	TRANSISTOR 2SC3311A-QRSTA
Q701	8-729-423-33	TRANSISTOR 2SC3311A-QRSTA

RESISTOR

REF.NO.	PART NO.	DESCRIPTION			
R700	1-247-863-91	CARBON	22K	5%	1/4W
R701	1-249-429-11	CARBON	10K	5%	1/4W
R702	1-247-815-91	CARBON	220	5%	1/4W
R703	1-247-807-31	CARBON	100	5%	1/4W
R704	1-249-421-11	CARBON	2.2K	5%	1/4W
R705	1-249-429-11	CARBON	10K	5%	1/4W
R706	1-249-381-11	CARBON	1	5%	1/4W
R707	1-249-383-11	CARBON	1.5	5%	1/4W
R708	1-247-807-31	CARBON	100	5%	1/4W
R709	1-247-807-31	CARBON	100	5%	1/4W

Downloaded from www.Manualslib.com manuals search engine

CA D

Note:

The components identified by shading and mark ⚠ are critical for safety. Replace only with part number specified.

Note:

Les composants identifies per un trame et une marque ⚠ sont critiques pour la securite. Ne les remplacer que par une piece portant le numero specifie.

REF.NO.	PART NO.	DESCRIPTION	REMARK		
R710	1-247-807-31	CARBON	100	5%	1/4W
R711	1-260-099-11	CARBON	1K	5%	1/2W
R712	1-260-099-11	CARBON	1K	5%	1/2W
R713	1-260-099-11	CARBON	1K	5%	1/2W
R714	1-260-087-11	CARBON	100	5%	1/2W
R715	1-260-132-11	CARBON	560K	5%	1/2W
R716	1-260-123-11	CARBON	100K	5%	1/2W
R717	1-216-373-11	METAL OXIDE	2.2	5%	2W
R719	1-215-888-00	METAL OXIDE	220	5%	2W
R720	1-249-421-11	CARBON	2.2K	5%	1/4W
R721	1-249-421-11	CARBON	2.2K	5%	1/4W

VARIABLE RESISTOR

RV701	1-241-656-11	RES, ADJ, METAL FILM 110M			

D

* A-1343-875-A D (VAR) MOUNTED PC BOARD

CAPACITOR

C801	1-117-534-91	ELECT	1µF	20%	100V
C802	1-117-511-91	ELECT	10µF	20%	50V
C803	1-136-191-11	MYLAR	0.22µF	5%	63V
C804	1-136-191-11	MYLAR	0.22µF	5%	63V
C807	1-163-021-91	CERAMIC CHIP	0.01µF	10%	50V
C808	1-163-021-91	CERAMIC CHIP	0.01µF	10%	50V
C809	1-110-501-11	CERAMIC CHIP	0.33µF	10%	16V
C810	1-130-495-00	MYLAR	0.1µF	5%	50V
C812	1-163-021-91	CERAMIC CHIP	0.01µF	10%	50V
C814	1-163-021-91	CERAMIC CHIP	0.01µF	10%	50V
C815	1-129-718-00	FILM	0.022µF	5%	630V
C816	1-102-244-00	CERAMIC	220PF	10%	500V
C817	1-136-558-11	FILM	0.0039µF	5%	630V
C818	1-164-735-51	CERAMIC	0.0015µF	10%	500V
C820	1-109-954-11	ELECT	0.47µF	20%	160V
C821	1-163-021-91	CERAMIC CHIP	0.01µF	10%	50V
C823	1-130-967-00	FILM	0.0027µF	5%	50V
C824	1-104-760-11	CERAMIC CHIP	0.047µF	10%	50V
C825	1-137-150-11	MYLAR	0.01µF	5%	50V
C826	1-163-251-11	CERAMIC CHIP	100PF	5%	50V
C862	1-117-511-91	ELECT	10µF	20%	50V

CONNECTOR

CN800 *	1-564-510-11	PLUG, CONNECTOR 7P	
CN801 *	1-564-507-11	PLUG, CONNECTOR 4P	
CN802 *	1-508-784-21	PIN, CONNECTOR (5MM PITCH) 1P	

REF.NO.	PART NO.	DESCRIPTION	REMARK

DIODE

D801	8-719-109-89	DIODE MTZJ-T-77-5.6C	
D802	8-719-991-33	DIODE 1SS133T-77	
D808	8-719-991-33	DIODE 1SS133T-77	
D809	8-719-110-41	DIODE MTZJ-T-77-15B	
D810	8-719-970-87	DIODE ERA38-06TP1	
D811	8-719-970-87	DIODE ERA38-06TP1	
D812	8-719-300-33	DIODE ERB44-06TP1	
D813	8-719-991-33	DIODE 1SS133T-77	
D814	8-719-991-33	DIODE 1SS133T-77	

IC

IC801	8-759-700-42	IC NJM2904D	
IC802	8-759-659-67	IC NJM2903D	
IC803	8-759-659-67	IC NJM2903D	

CHIP CONDUCTOR

JR801	1-216-295-91	SHORT	

COIL

L803	1-406-677-11	INDUCTOR	10mH

TRANSISTOR

Q801	8-729-422-27	TRANSISTOR 2SD601A-QRS-TX	
Q802	8-729-216-22	TRANSISTOR 2SB709A-QRS-TX	
Q803	8-729-216-22	TRANSISTOR 2SB709A-QRS-TX	
Q804	8-729-216-22	TRANSISTOR 2SB709A-QRS-TX	
Q805	8-729-140-97	TRANSISTOR 2SB734-T-34	
Q806	8-729-422-27	TRANSISTOR 2SD601A-QRS-TX	
Q809	8-729-422-27	TRANSISTOR 2SD601A-QRS-TX	
Q810	8-729-043-95	TRANSISTOR 2SC3840K	
Q811	8-729-119-76	TRANSISTOR 2SA1309A-QRSTA	
Q812	8-729-119-76	TRANSISTOR 2SA1309A-QRSTA	

RESISTOR

R801	1-216-089-91	RES-CHIP	47K	5%	1/10W
R802	1-216-073-00	RES-CHIP	10K	5%	1/10W
R803	1-216-081-00	RES-CHIP	22K	5%	1/10W
R804	1-216-073-00	RES-CHIP	10K	5%	1/10W
R805	1-216-065-91	RES-CHIP	4.7K	5%	1/10W
R806	1-216-081-00	RES-CHIP	22K	5%	1/10W
R807	1-216-061-00	RES-CHIP	3.3K	5%	1/10W
R808	1-216-073-00	RES-CHIP	10K	5%	1/10W
R809	1-216-081-00	RES-CHIP	22K	5%	1/10W
R811	1-216-025-91	RES-CHIP	100	5%	1/10W

Downloaded from www.Manualslib.com manuals search engine

D HX K

Note:

The components identified by shading and mark ⚠ are critical for safety. Replace only with part number specified.

Note:

Les composants identifies per un trame et une marque ⚠ sont critiques pour la securite. Ne les remplacer que par une piece portant le numero specifie.

REF.NO.	PART NO.	DESCRIPTION	REMARK		
R812	1-216-061-00	RES-CHIP	3.3K	5%	1/10W
R813	1-216-041-00	RES-CHIP	470	5%	1/10W
R815	1-215-862-11	METAL OXIDE	68	5%	1W
R816	1-247-807-31	CARBON	100	5%	1/4W
R817	1-216-091-00	RES-CHIP	56K	5%	1/10W
R819	1-216-089-91	RES-CHIP	47K	5%	1/10W
R820	1-216-683-11	METAL CHIP	22K	0.50%	1/10W
R821	1-216-077-91	RES-CHIP	15K	5%	1/10W
R822	1-216-065-91	RES-CHIP	4.7K	5%	1/10W
R823	1-216-065-91	RES-CHIP	4.7K	5%	1/10W
R824	1-208-830-11	METAL CHIP	100K	0.50%	1/10W
R825	1-208-830-11	METAL CHIP	100K	0.50%	1/10W
R827	1-216-065-91	RES-CHIP	4.7K	5%	1/10W
R828	1-216-085-00	RES-CHIP	33K	5%	1/10W
R829	1-208-846-11	METAL CHIP	470K	0.50%	1/10W
R830	1-216-295-91	SHORT			
R831	1-216-049-91	RES-CHIP	1K	5%	1/10W
R832	1-216-067-00	RES-CHIP	5.6K	5%	1/10W
R833	1-216-687-11	METAL CHIP	33K	0.50%	1/10W
R834	1-216-065-91	RES-CHIP	4.7K	5%	1/10W
R835	1-216-057-00	RES-CHIP	2.2K	5%	1/10W
R836	1-216-057-00	RES-CHIP	2.2K	5%	1/10W
R837	1-208-808-11	METAL CHIP	12K	0.50%	1/10W
R838	1-247-807-31	CARBON	100	5%	1/4W
R839	1-216-025-91	RES-CHIP	100	5%	1/10W
R840	1-216-093-91	RES-CHIP	68K	5%	1/10W
R841	1-208-802-11	METAL CHIP	6.8K	0.50%	1/10W
R842	1-208-796-11	METAL CHIP	3.9K	0.50%	1/10W
R845	1-249-441-11	CARBON	100K	5%	1/4W
R846	1-249-441-11	CARBON	100K	5%	1/4W
R847	1-249-441-11	CARBON	100K	5%	1/4W
R848	1-215-876-00	METAL OXIDE	15K	5%	1W
R849	1-215-920-11	METAL OXIDE	3.3K	5%	3W
R851	1-215-894-11	METAL OXIDE	2.2K	5%	2W
R854	1-216-069-00	RES-CHIP	6.8K	5%	1/10W
R855	1-216-089-91	RES-CHIP	47K	5%	1/10W
R860	1-208-806-11	METAL CHIP	10K	0.50%	1/10W
R862	1-216-057-00	RES-CHIP	2.2K	5%	1/10W
R863	1-216-057-00	RES-CHIP	2.2K	5%	1/10W
R864	1-216-033-00	RES-CHIP	220	5%	1/10W
R865	1-216-097-91	RES-CHIP	100K	5%	1/10W
R866	1-249-429-11	CARBON	10K	5%	1/4W
R867	1-216-073-00	RES-CHIP	10K	5%	1/10W
R868	1-216-073-00	RES-CHIP	10K	5%	1/10W
R869	1-216-097-91	RES-CHIP	100K	5%	1/10W
R870	1-216-057-00	RES-CHIP	2.2K	5%	1/10W
R871	1-215-489-00	METAL	680K	1%	1/4W
R872	1-216-121-91	RES-CHIP	1M	5%	1/10W
R873	1-216-073-00	RES-CHIP	10K	5%	1/10W
R874	1-216-037-00	RES-CHIP	330	5%	1/10W
R875	1-216-035-00	RES-CHIP	270	5%	1/10W
R890	1-216-097-91	RES-CHIP	100K	5%	1/10W

TRANSFORMER

T801	1-424-584-11	TRANSFORMER, DYNAMIC FOCUS

HX

*	A-1372-817-A	HX MOUNTED PC BOARD

CONNECTOR

CN4001*	1-564-518-11	PLUG, CONNECTOR 3P

RESISTOR

R4001	1-216-025-91	RES-CHIP	100	5%	1/10W
R4002	1-216-045-00	RES-CHIP	680	5%	1/10W
R4003	1-216-047-91	RES-CHIP	820	5%	1/10W
R4004	1-216-057-00	RES-CHIP	2.2K	5%	1/10W
R4005	1-216-069-00	RES-CHIP	6.8K	5%	1/10W

SWITCH

S4001	1-762-196-21	SWITCH, TACTILE
S4002	1-762-196-21	SWITCH, TACTILE
S4003	1-762-196-21	SWITCH, TACTILE
S4004	1-762-196-21	SWITCH, TACTILE
S4005	1-762-196-21	SWITCH, TACTILE
S4006	1-762-196-21	SWITCH, TACTILE

K

*	A-1380-627-A	K (VAR) MOUNTED PC BOARD

CAPACITOR

C201	1-126-963-11	ELECT	4.7µF	20%	50V
C202	1-126-963-11	ELECT	4.7µF	20%	50V
C404	1-164-182-11	CERAMIC CHIP	0.0033µF	10%	50V
C405	1-163-034-00	CERAMIC CHIP	0.033µF		50V
C406	1-163-011-11	CERAMIC CHIP	0.0015µF	10%	50V
C407	1-164-222-11	CERAMIC CHIP	0.22µF		25V
C408	1-164-222-11	CERAMIC CHIP	0.22µF		25V
C409	1-163-011-11	CERAMIC CHIP	0.0015µF	10%	50V
C410	1-163-034-00	CERAMIC CHIP	0.033µF		50V
C411	1-164-182-11	CERAMIC CHIP	0.0033µF	10%	50V

Downloaded from www.Manualslib.com manuals search engine

K MA

Note:

The components identified by shading and mark ⚠ are critical for safety. Replace only with part number specified.

Note:

Les composants identifies per un trame et une marque ⚠ sont critiques pour la securite. Ne les remplacer que par une piece portant le numero specifie.

REF.NO.	PART NO.	DESCRIPTION	REMARK		
C412	1-163-038-91	CERAMIC CHIP	0.1µF		25V
C413	1-126-963-11	ELECT	4.7µF	20%	50V
C414	1-126-963-11	ELECT	4.7µF	20%	50V
C415	1-126-963-11	ELECT	4.7µF	20%	50V
C416	1-126-963-11	ELECT	4.7µF	20%	50V
C417	1-126-963-11	ELECT	4.7µF	20%	50V
C418	1-163-038-91	CERAMIC CHIP	0.1µF		25V
C419	1-164-346-11	CERAMIC CHIP	1µF		16V
C422	1-126-963-11	ELECT	4.7µF	20%	50V
C423	1-126-963-11	ELECT	4.7µF	20%	50V
C446	1-126-933-11	ELECT	100µF	20%	16V
C447	1-126-961-11	ELECT	2.2µF	20%	50V
C448	1-126-961-11	ELECT	2.2µF	20%	50V
C450	1-126-963-11	ELECT	4.7µF	20%	50V
C451	1-126-963-11	ELECT	4.7µF	20%	50V
C475	1-163-038-91	CERAMIC CHIP	0.1µF		25V

CONNECTOR

CN402	1-691-765-11	PLUG (MICRO CONNECTOR) 3P
CN450	1-573-301-21	CONNECTOR, BOARD TO BOARD 20P

IC

IC404	8-759-658-01	IC NJW1130G-TE2

CHIP CONDUCTOR

JR403	1-216-295-91	SHORT
JR404	1-216-295-91	SHORT
JR407	1-216-295-91	SHORT
JR408	1-216-295-91	SHORT
JR420	1-216-295-91	SHORT
JR421	1-216-295-91	SHORT
JR422	1-216-295-91	SHORT
JR423	1-216-295-91	SHORT
JR426	1-216-295-91	SHORT
JR427	1-216-295-91	SHORT
JR428	1-216-295-91	SHORT
JR429	1-216-295-91	SHORT
JR452	1-216-295-91	SHORT
JR474	1-216-295-91	SHORT
JR477	1-216-295-91	SHORT

COIL

L410	1-414-271-11	INDUCTOR	47µH

RESISTOR

REF.NO.	PART NO.	DESCRIPTION	REMARK		
R219	1-216-065-91	RES-CHIP	4.7K	5%	1/10W
R220	1-216-065-91	RES-CHIP	4.7K	5%	1/10W
R403	1-216-025-91	RES-CHIP	100	5%	1/10W
R404	1-216-025-91	RES-CHIP	100	5%	1/10W
R405	1-216-025-91	RES-CHIP	100	5%	1/10W
R406	1-216-025-91	RES-CHIP	100	5%	1/10W
R407	1-216-025-91	RES-CHIP	100	5%	1/10W
R408	1-216-025-91	RES-CHIP	100	5%	1/10W
R409	1-216-025-91	RES-CHIP	100	5%	1/10W
R410	1-216-025-91	RES-CHIP	100	5%	1/10W
R450	1-216-025-91	RES-CHIP	100	5%	1/10W
R451	1-216-025-91	RES-CHIP	100	5%	1/10W
R455	1-216-025-91	RES-CHIP	100	5%	1/10W
R456	1-216-025-91	RES-CHIP	100	5%	1/10W
R477	1-216-113-00	RES-CHIP	470K	5%	1/10W
R478	1-216-113-00	RES-CHIP	470K	5%	1/10W
R479	1-216-113-00	RES-CHIP	470K	5%	1/10W
R480	1-216-113-00	RES-CHIP	470K	5%	1/10W

MA

*	A-1304-198-A	MA (VAR) MOUNTED PC BOARD (KV-27FS16 ONLY)
*	A-1304-200-A	MA (VAR) MOUNTED PC BOARD (KV-27FS12/29FS12/29FS12C)

CAPACITOR

C003	1-126-959-11	ELECT	0.47µF	20%	50V
C005	1-164-005-11	CERAMIC CHIP	0.47µF		25V
C005	1-164-005-11	CERAMIC CHIP (KV-27FS16 ONLY)	0.47µF		25V
C006	1-126-964-11	ELECT	10µF	20%	50V
C009	1-163-259-91	CERAMIC CHIP	220PF	5%	50V
C010	1-163-035-00	CERAMIC CHIP	0.047µF		50V
C011	1-163-259-91	CERAMIC CHIP	220PF	5%	50V
C012	1-163-009-11	CERAMIC CHIP	0.001µF	10%	50V
C015	1-163-231-11	CERAMIC CHIP	15PF	5%	50V
C016	1-163-231-11	CERAMIC CHIP	15PF	5%	50V
C017	1-126-960-11	ELECT	1µF	20%	50V
C019	1-163-259-91	CERAMIC CHIP	220PF	5%	50V
C020	1-163-038-91	CERAMIC CHIP	0.1µF		25V
C021	1-163-259-91	CERAMIC CHIP	220PF	5%	50V
C022	1-163-135-00	CERAMIC CHIP	560PF	5%	50V
C027	1-163-009-11	CERAMIC CHIP	0.001µF	10%	50V
C028	1-163-259-91	CERAMIC CHIP	220PF	5%	50V
C032	1-164-004-11	CERAMIC CHIP	0.1µF	10%	25V
C033	1-163-259-91	CERAMIC CHIP	220PF	5%	50V

Downloaded from www.Manualslib.com manuals search engine

MA

Note:

The components identified by shading and mark ⚠ are critical for safety. Replace only with part number specified.

Note:

Les composants identifies per un trame et une marque ⚠ sont critiques pour la securite. Ne les remplacer que par une piece portant le numero specifie.

REF.NO.	PART NO.	DESCRIPTION	REMARK		
C034	1-163-037-11	CERAMIC CHIP	0.022µF	10%	50V
C037	1-164-161-11	CERAMIC CHIP	0.0022µF	10%	50V
C038	1-126-935-11	ELECT	470µF	20%	16V
C039	1-126-964-11	ELECT	10µF	20%	50V
C040	1-163-229-11	CERAMIC CHIP	12PF	5%	50V
C041	1-163-229-11	CERAMIC CHIP	12PF	5%	50V
C042	1-163-259-91	CERAMIC CHIP	220PF	5%	50V
C043	1-163-009-11	CERAMIC CHIP	0.001µF	10%	50V
C044	1-163-009-11	CERAMIC CHIP	0.001µF	10%	50V
C045	1-164-161-11	CERAMIC CHIP	0.0022µF	10%	50V
C046	1-104-664-11	ELECT	47µF	20%	25V
C047	1-163-259-91	CERAMIC CHIP	220PF	5%	50V
C048	1-163-259-91	CERAMIC CHIP	220PF	5%	50V
C051	1-126-935-11	ELECT	470µF	20%	16V
C060	1-163-005-11	CERAMIC CHIP	470PF	10%	50V
C062	1-126-959-11	ELECT	0.47µF	20%	50V
C063	1-137-194-81	MYLAR	0.47µF	5%	50V
C064	1-163-017-00	CERAMIC CHIP	0.0047µF	10%	50V
C070	1-163-009-11	CERAMIC CHIP	0.001µF	10%	50V
C071	1-163-009-11	CERAMIC CHIP	0.001µF	10%	50V
C076	1-163-259-91	CERAMIC CHIP	220PF	5%	50V
C077	1-163-259-91	CERAMIC CHIP	220PF	5%	50V
C091	1-163-037-11	CERAMIC CHIP	0.022µF	10%	50V
C093	1-163-259-91	CERAMIC CHIP	220PF	5%	50V
C097	1-163-009-11	CERAMIC CHIP	0.001µF	10%	50V
C099	1-126-960-11	ELECT	1µF	20%	50V
C151	1-126-960-11	ELECT (KV-27FS16 ONLY)	1µF	20%	50V
C153	1-163-017-00	CERAMIC CHIP (KV-27FS16 ONLY)	0.0047µF	10%	50V
C154	1-126-967-11	ELECT (KV-27FS16 ONLY)	47µF	20%	50V
C155	1-126-964-11	ELECT (KV-27FS16 ONLY)	10µF	20%	50V
C156	1-104-664-11	ELECT (KV-27FS16 ONLY)	47µF	20%	25V
C157	1-126-968-11	ELECT (KV-27FS16 ONLY)	100µF	20%	50V
C302	1-163-021-91	CERAMIC CHIP	0.01µF	10%	50V
C303	1-163-021-91	CERAMIC CHIP	0.01µF	10%	50V
C304	1-163-021-91	CERAMIC CHIP	0.01µF	10%	50V
C305	1-126-933-11	ELECT	100µF	20%	16V
C307	1-163-227-11	CERAMIC CHIP	10PF	0.50PF	50V
C308	1-163-021-91	CERAMIC CHIP	0.01µF	10%	50V
C309	1-126-933-11	ELECT	100µF	20%	16V
C310	1-126-960-11	ELECT	1µF	20%	50V
C311	1-163-123-00	CERAMIC CHIP	180PF	5%	50V
C313	1-163-021-91	CERAMIC CHIP	0.01µF	10%	50V
C314	1-163-231-11	CERAMIC CHIP	15PF	5%	50V
C315	1-104-664-11	ELECT	47µF	20%	25V
C316	1-163-243-11	CERAMIC CHIP	47PF	5%	50V
C317	1-163-021-91	CERAMIC CHIP	0.01µF	10%	50V
C318	1-163-021-91	CERAMIC CHIP	0.01µF	10%	50V
C319	1-126-767-11	ELECT	1000µF	20%	16V
C320	1-164-005-11	CERAMIC CHIP	0.47µF		25V
C321	1-164-005-11	CERAMIC CHIP	0.47µF		25V
C322	1-164-005-11	CERAMIC CHIP	0.47µF		25V
C323	1-164-004-11	CERAMIC CHIP	0.1µF	10%	25V
C324	1-163-231-11	CERAMIC CHIP	15PF	5%	50V
C325	1-164-005-11	CERAMIC CHIP	0.47µF		25V
C326	1-164-004-11	CERAMIC CHIP	0.1µF	10%	25V
C328	1-164-004-11	CERAMIC CHIP	0.1µF	10%	25V
C329	1-164-004-11	CERAMIC CHIP	0.1µF	10%	25V
C330	1-126-960-11	ELECT	1µF	20%	50V
C331	1-163-021-91	CERAMIC CHIP	0.01µF	10%	50V
C332	1-163-010-11	CERAMIC CHIP	0.0012µF	10%	50V
C334	1-163-003-11	CERAMIC CHIP	330PF	10%	50V
C335	1-126-963-11	ELECT	4.7µF	20%	50V
C336	1-104-664-11	ELECT	47µF	20%	25V
C338	1-164-004-11	CERAMIC CHIP	0.1µF	10%	25V
C339	1-126-960-11	ELECT	1µF	20%	50V
C340	1-126-933-11	ELECT	100µF	20%	16V
C341	1-163-233-11	CERAMIC CHIP	18PF	5%	50V
C345	1-163-021-91	CERAMIC CHIP (KV-27FS16 ONLY)	0.01µF	10%	50V
C346	1-163-021-91	CERAMIC CHIP (KV-27FS16 ONLY)	0.01µF	10%	50V
C347	1-163-021-91	CERAMIC CHIP (KV-27FS16 ONLY)	0.01µF	10%	50V
C348	1-164-005-11	CERAMIC CHIP	0.47µF		25V
C350	1-126-959-11	ELECT	0.47µF	20%	50V
C351	1-163-021-91	CERAMIC CHIP	0.01µF	10%	50V
C352	1-163-021-91	CERAMIC CHIP	0.01µF	10%	50V
C353	1-163-021-91	CERAMIC CHIP	0.01µF	10%	50V
C354	1-126-933-11	ELECT	100µF	20%	16V
C355	1-163-021-91	CERAMIC CHIP	0.01µF	10%	50V
C356	1-164-004-11	CERAMIC CHIP	0.1µF	10%	25V
C357	1-104-664-11	ELECT	47µF	20%	25V
C358	1-104-664-11	ELECT	47µF	20%	25V
C359	1-163-021-91	CERAMIC CHIP	0.01µF	10%	50V
C360	1-126-959-11	ELECT	0.47µF	20%	50V
C361	1-163-021-91	CERAMIC CHIP	0.01µF	10%	50V
C362	1-104-664-11	ELECT	47µF	20%	25V
C363	1-163-038-91	CERAMIC CHIP	0.1µF		25V
C364	1-164-004-11	CERAMIC CHIP	0.1µF	10%	25V
C365	1-137-194-81	MYLAR	0.47µF	5%	50V
C366	1-163-021-91	CERAMIC CHIP	0.01µF	10%	50V
C367	1-163-005-11	CERAMIC CHIP	470PF	10%	50V
C368	1-163-021-91	CERAMIC CHIP	0.01µF	10%	50V

Downloaded from www.Manualslib.com manuals search engine

MA

Note:

The components identified by shading and mark ⚠ are critical for safety. Replace only with part number specified.

Note:

Les composants identifies per un trame et une marque ⚠ sont critiques pour la securite. Ne les remplacer que par une piece portant le numero specifie.

REF.NO.	PART NO.	DESCRIPTION	REMARK		
C369	1-163-021-91	CERAMIC CHIP	0.01µF	10%	50V
C370	1-126-933-11	ELECT	100µF	20%	16V
C371	1-163-243-11	CERAMIC CHIP	47PF	5%	50V
C377	1-126-963-11	ELECT	4.7µF	20%	50V
C389	1-115-185-11	CERAMIC CHIP	0.033µF	10%	50V
C390	1-163-231-11	CERAMIC CHIP	15PF	5%	50V
C391	1-126-933-11	ELECT	100µF	20%	16V
C395	1-163-021-91	CERAMIC CHIP	0.01µF	10%	50V
C396	1-164-004-11	CERAMIC CHIP	0.1µF	10%	25V
C397	1-163-021-91	CERAMIC CHIP	0.01µF	10%	50V
C398	1-126-964-11	ELECT	10µF	20%	50V
C451	1-164-346-11	CERAMIC CHIP (KV-27FS16 ONLY)	1µF		16V
C452	1-164-346-11	CERAMIC CHIP (KV-27FS16 ONLY)	1µF		16V
C453	1-164-346-11	CERAMIC CHIP (KV-27FS16 ONLY)	1µF		16V
C454	1-164-346-11	CERAMIC CHIP (KV-27FS16 ONLY)	1µF		16V

CONNECTOR

CN001 *	1-564-511-11	PLUG, CONNECTOR 8P
CN002 *	1-560-124-00	PLUG, CONNECTOR (2.5MM) 4P
CN003 *	1-564-512-11	PLUG, CONNECTOR 9P
CN004 *	1-564-512-11	PLUG, CONNECTOR 9P
CN005 *	1-764-333-11	PLUG, CONNECTOR 10P
CN006 *	1-764-333-11	PLUG, CONNECTOR 10P
CN302 *	1-564-507-11	PLUG, CONNECTOR 4P
CN303	1-900-805-12	CONNECTOR ASSY 9P BOARD
CN304 *	1-564-507-11	PLUG, CONNECTOR 4P (KV-27FS16 ONLY)
CN305	1-573-298-21	CONNECTOR, BOARD TO BOARD 20P (KV-27FS16 ONLY)
CN309 *	1-564-506-11	PLUG, CONNECTOR 3P
CN401 *	1-564-505-11	PLUG, CONNECTOR 2P (KV-27FS16 ONLY)

DIODE

D001	8-719-976-99	DIODE UDZ-TE-17-5.1B
D002	8-719-110-17	DIODE MTZJ-T-77-10B
D003	8-719-073-01	DIODE MA111-TX
D004	8-719-976-99	DIODE UDZ-TE-17-5.1B
D005	8-719-109-89	DIODE MTZJ-T-77-5.6C
D006	8-719-977-22	DIODE UDZ-TE-17-9.1B
D075	8-719-073-01	DIODE MA111-TX
D301	8-719-921-44	DIODE MTZJ-T-77-5.1C
D303	8-719-991-33	DIODE 1SS133T-77 (KV-27FS16 ONLY)
D305	8-719-921-44	DIODE MTZJ-T-77-5.1C
D360	8-719-914-44	DIODE DAP202K-T-146

FERRITE BEAD

REF.NO.	PART NO.	DESCRIPTION	REMARK
FB001	1-414-234-22	INDUCTOR CHIP	0µH
FB002	1-414-234-22	INDUCTOR CHIP	0µH
FB301	1-412-911-11	FERRITE	0µH
FB302	1-412-911-11	FERRITE	0µH

FILTER

FL301	1-239-847-11	FILTER, LOW PASS
FL302	1-239-847-11	FILTER, LOW PASS
FL303	1-239-847-11	FILTER, LOW PASS

IC

IC001	8-759-658-00	IC M37280MK-110SP
IC002	8-759-663-29	IC MM1476AF(TP)
IC003	8-759-527-77	IC M24C16-MN6T
IC301 ⚠	8-752-094-98	IC CXA2154S
IC302	8-759-655-75	IC TC90A49P

CHIP CONDUCTOR

JR001	1-216-295-91	SHORT
JR002	1-216-295-91	SHORT
JR003	1-216-295-91	SHORT
JR005	1-216-295-91	SHORT
JR006	1-216-295-91	SHORT
JR007	1-216-295-91	SHORT
JR008	1-216-295-91	SHORT
JR010	1-216-295-91	SHORT
JR011	1-216-295-91	SHORT
JR090	1-216-295-91	SHORT
JR100	1-216-295-91	SHORT
JR296	1-216-295-91	SHORT
JR297	1-216-295-91	SHORT
JR298	1-216-295-91	SHORT
JR350	1-216-295-91	SHORT
JR378	1-216-295-91	SHORT
JR379	1-216-295-91	SHORT
JR399	1-216-295-91	SHORT
JR401	1-216-295-91	SHORT

COIL

L002	1-414-273-11	INDUCTOR	100µH
L003	1-414-273-11	INDUCTOR	100µH
L040	1-408-963-11	INDUCTOR	2.7µH
L150	1-414-267-11	INDUCTOR (KV-27FS16 ONLY)	10µH
L151	1-414-273-11	INDUCTOR (KV-27FS16 ONLY)	100µH

Downloaded from www.Manualslib.com manuals search engine

MA

Note:

The components identified by shading and mark ⚠ are critical for safety. Replace only with part number specified.

Note:

Les composants identifies per un trame et une marque ⚠ sont critiques pour la securite. Ne les remplacer que par une piece portant le numero specifie.

REF.NO.	PART NO.	DESCRIPTION	REMARK
L301	1-414-267-11	INDUCTOR	10µH
L302	1-414-271-11	INDUCTOR	47µH
L303	1-414-856-11	INDUCTOR	10µH
L304	1-414-856-11	INDUCTOR	10µH
L305	1-414-267-11	INDUCTOR	10µH
L308	1-414-273-11	INDUCTOR	100µH
L310	1-414-273-11	INDUCTOR	100µH
L350	1-414-856-11	INDUCTOR	10µH
L351	1-414-856-11	INDUCTOR	10µH

TRANSISTOR

Q001	8-729-216-22	TRANSISTOR 2SB709A-QRS-TX	
Q002	8-729-422-27	TRANSISTOR 2SD601A-QRS-TX	
Q003	8-729-422-27	TRANSISTOR 2SD601A-QRS-TX	
Q004	8-729-216-22	TRANSISTOR 2SB709A-QRS-TX	
Q006	8-729-216-22	TRANSISTOR 2SB709A-QRS-TX	
Q082	8-729-422-27	TRANSISTOR 2SD601A-QRS-TX	
Q151	8-729-216-22	TRANSISTOR 2SB709A-QRS-TX	
Q152	8-729-422-27	TRANSISTOR 2SD601A-QRS-TX	(KV-27FS16 ONLY)
Q302	8-729-422-27	TRANSISTOR 2SD601A-QRS-TX	
Q303	8-729-216-22	TRANSISTOR 2SB709A-QRS-TX	
Q305	8-729-216-22	TRANSISTOR 2SB709A-QRS-TX	
Q310	8-729-216-22	TRANSISTOR 2SB709A-QRS-TX	
Q349	8-729-422-27	TRANSISTOR 2SD601A-QRS-TX	
Q350	8-729-216-22	TRANSISTOR 2SB709A-QRS-TX	
Q351	8-729-216-22	TRANSISTOR 2SB709A-QRS-TX	
Q352	8-729-422-27	TRANSISTOR 2SD601A-QRS-TX	
Q354	8-729-216-22	TRANSISTOR 2SB709A-QRS-TX	
Q355	8-729-216-22	TRANSISTOR 2SB709A-QRS-TX	
Q356	8-729-422-27	TRANSISTOR 2SD601A-QRS-TX	
Q358	8-729-422-27	TRANSISTOR 2SD601A-QRS-TX	
Q359	8-729-216-22	TRANSISTOR 2SB709A-QRS-TX	
Q365	8-729-422-27	TRANSISTOR 2SD601A-QRS-TX	
Q368	8-729-422-27	TRANSISTOR 2SD601A-QRS-TX	
Q369	8-729-216-22	TRANSISTOR 2SB709A-QRS-TX	
Q370	8-729-216-22	TRANSISTOR 2SB709A-QRS-TX	
Q375	8-729-422-27	TRANSISTOR 2SD601A-QRS-TX	
Q378	8-729-216-22	TRANSISTOR 2SB709A-QRS-TX	(KV-27FS16 ONLY)
Q379	8-729-119-76	TRANSISTOR 2SA1309A-QRSTA	(KV-27FS16 ONLY)
Q380	8-729-216-22	TRANSISTOR 2SB709A-QRS-TX	(KV-27FS16 ONLY)
Q387	8-729-216-22	TRANSISTOR 2SB709A-QRS-TX	
Q388	8-729-216-22	TRANSISTOR 2SB709A-QRS-TX	
Q389	8-729-216-22	TRANSISTOR 2SB709A-QRS-TX	

RESISTOR

REF.NO.	PART NO.	DESCRIPTION			REMARK
R001	1-216-043-91	RES-CHIP	560	5%	1/10W
R002	1-216-041-00	RES-CHIP	470	5%	1/10W
R003	1-247-807-31	CARBON	100	5%	1/4W
R004	1-216-061-00	RES-CHIP	3.3K	5%	1/10W
R005	1-216-295-91	SHORT			
R006	1-216-025-91	RES-CHIP	100	5%	1/10W
R007	1-216-025-91	RES-CHIP	100	5%	1/10W
R008	1-216-049-91	RES-CHIP	1K	5%	1/10W
R009	1-216-121-91	RES-CHIP	1M	5%	1/10W
R010	1-216-033-00	RES-CHIP	220	5%	1/10W
R011	1-216-033-00	RES-CHIP	220	5%	1/10W
R012	1-216-045-00	RES-CHIP	680	5%	1/10W
R013	1-249-417-11	CARBON	1K	5%	1/4W
R014	1-216-073-00	RES-CHIP	10K	5%	1/10W
R015	1-216-073-00	RES-CHIP	10K	5%	1/10W
R016	1-216-041-00	RES-CHIP	470	5%	1/10W
R017	1-208-798-11	METAL CHIP	4.7K	0.50%	1/10W
R018	1-247-815-91	CARBON	220	5%	1/4W
R019	1-216-113-00	RES-CHIP	470K	5%	1/10W
R020	1-216-033-00	RES-CHIP	220	5%	1/10W
R021	1-249-429-11	CARBON	10K	5%	1/4W
R022	1-247-815-91	CARBON	220	5%	1/4W
R023	1-249-429-11	CARBON	10K	5%	1/4W
R024	1-247-815-91	CARBON	220	5%	1/4W
R025	1-249-426-11	CARBON	5.6K	5%	1/4W
R026	1-249-426-11	CARBON	5.6K	5%	1/4W
R027	1-249-426-11	CARBON	5.6K	5%	1/4W
R028	1-216-049-91	RES-CHIP	1K	5%	1/10W
R029	1-216-065-91	RES-CHIP	4.7K	5%	1/10W
R030	1-216-065-91	RES-CHIP	4.7K	5%	1/10W
R031	1-216-355-11	METAL OXIDE	3.3	5%	1W
R032	1-216-033-00	RES-CHIP	220	5%	1/10W
R033	1-216-033-00	RES-CHIP	220	5%	1/10W
R034	1-216-033-00	RES-CHIP	220	5%	1/10W
R035	1-216-033-00	RES-CHIP	220	5%	1/10W
R036	1-216-049-91	RES-CHIP	1K	5%	1/10W
R037	1-247-815-91	CARBON	220	5%	1/4W
R038	1-216-049-91	RES-CHIP	1K	5%	1/10W
R039	1-216-045-00	RES-CHIP	680	5%	1/10W
R040	1-247-815-91	CARBON	220	5%	1/4W
R041	1-216-045-00	RES-CHIP	680	5%	1/10W
R042	1-216-071-00	RES-CHIP	8.2K	5%	1/10W
R043	1-249-417-11	CARBON	1K	5%	1/4W
R044	1-216-033-00	RES-CHIP	220	5%	1/10W
R045	1-216-065-91	RES-CHIP	4.7K	5%	1/10W

Downloaded from www.Manualslib.com manuals search engine

MA

Note:

The components identified by shading and mark ⚠ are critical for safety. Replace only with part number specified.

Note:

Les composants identifies per un trame et une marque ⚠ sont critiques pour la securite. Ne les remplacer que par une piece portant le numero specifie.

REF.NO.	PART NO.	DESCRIPTION	REMARK		
R046	1-216-033-00	RES-CHIP	220	5%	1/10W
R047	1-216-065-91	RES-CHIP	4.7K	5%	1/10W
R048	1-216-025-91	RES-CHIP (KV-27FS16 ONLY)	100	5%	1/10W
R050	1-216-033-00	RES-CHIP	220	5%	1/10W
R051	1-216-033-00	RES-CHIP	220	5%	1/10W
R052	1-249-417-11	CARBON	1K	5%	1/4W
R054	1-216-065-91	RES-CHIP	4.7K	5%	1/10W
R055	1-216-065-91	RES-CHIP	4.7K	5%	1/10W
R056	1-208-798-11	METAL CHIP	4.7K	0.50%	1/10W
R057	1-216-065-91	RES-CHIP	4.7K	5%	1/10W
R058	1-216-065-91	RES-CHIP	4.7K	5%	1/10W
R060	1-247-815-91	CARBON	220	5%	1/4W
R061	1-216-033-00	RES-CHIP	220	5%	1/10W
R064	1-216-295-91	SHORT			
R069	1-247-815-91	CARBON (KV-27FS16 ONLY)	220	5%	1/4W
R070	1-216-065-91	RES-CHIP	4.7K	5%	1/10W
R071	1-216-065-91	RES-CHIP	4.7K	5%	1/10W
R073	1-249-425-11	CARBON	4.7K	5%	1/4W
R074	1-216-065-91	RES-CHIP	4.7K	5%	1/10W
R077	1-216-097-91	RES-CHIP	100K	5%	1/10W
R086	1-216-045-00	RES-CHIP	680	5%	1/10W
R087	1-216-045-00	RES-CHIP	680	5%	1/10W
R088	1-216-045-00	RES-CHIP	680	5%	1/10W
R091	1-216-073-00	RES-CHIP	10K	5%	1/10W
R092	1-208-798-11	METAL CHIP	4.7K	0.50%	1/10W
R093	1-216-065-91	RES-CHIP	4.7K	5%	1/10W
R094	1-216-065-91	RES-CHIP	4.7K	5%	1/10W
R095	1-216-065-91	RES-CHIP	4.7K	5%	1/10W
R096	1-216-065-91	RES-CHIP	4.7K	5%	1/10W
R097	1-249-414-11	CARBON	560	5%	1/4W
R099	1-216-089-91	RES-CHIP	47K	5%	1/10W
R150	1-216-053-00	RES-CHIP (KV-27FS16 ONLY)	1.5K	5%	1/10W
R151	1-216-025-91	RES-CHIP (KV-27FS16 ONLY)	100	5%	1/10W
R154	1-216-043-91	RES-CHIP (KV-27FS16 ONLY)	560	5%	1/10W
R155	1-216-043-91	RES-CHIP (KV-27FS16 ONLY)	560	5%	1/10W
R156	1-216-085-00	RES-CHIP (KV-27FS16 ONLY)	33K	5%	1/10W
R157	1-216-081-00	RES-CHIP (KV-27FS16 ONLY)	22K	5%	1/10W
R158	1-216-025-91	RES-CHIP (KV-27FS16 ONLY)	100	5%	1/10W
R159	1-216-025-91	RES-CHIP (KV-27FS16 ONLY)	100	5%	1/10W
R251	1-216-065-91	RES-CHIP	4.7K	5%	1/10W
R253	1-216-049-91	RES-CHIP	1K	5%	1/10W
R256	1-216-073-00	RES-CHIP	10K	5%	1/10W
R257	1-216-049-91	RES-CHIP	1K	5%	1/10W
R258	1-216-065-91	RES-CHIP	4.7K	5%	1/10W
R259	1-249-429-11	CARBON	10K	5%	1/4W
R260	1-247-815-91	CARBON	220	5%	1/4W
R261	1-216-113-00	RES-CHIP	470K	5%	1/10W
R262	1-247-807-31	CARBON	100	5%	1/4W
R263	1-216-025-91	RES-CHIP	100	5%	1/10W
R264	1-216-081-00	RES-CHIP (KV-27FS16 ONLY)	22K	5%	1/10W
R266	1-216-081-00	RES-CHIP (KV-27FS16 ONLY)	22K	5%	1/10W
R267	1-216-049-91	RES-CHIP	1K	5%	1/10W
R268	1-216-045-00	RES-CHIP	680	5%	1/10W
R269	1-216-049-91	RES-CHIP	1K	5%	1/10W
R270	1-216-081-00	RES-CHIP (KV-27FS16 ONLY)	22K	5%	1/10W
R271	1-216-081-00	RES-CHIP (KV-27FS16 ONLY)	22K	5%	1/10W
R272	1-216-081-00	RES-CHIP (KV-27FS16 ONLY)	22K	5%	1/10W
R273	1-216-073-00	RES-CHIP	10K	5%	1/10W
R274	1-216-295-91	SHORT			
R275	1-216-081-00	RES-CHIP	22K	5%	1/10W
R276	1-216-085-00	RES-CHIP	33K	5%	1/10W
R277	1-216-129-00	RES-CHIP	2.2M	5%	1/10W
R278	1-216-295-91	SHORT			
R279	1-247-807-31	CARBON	100	5%	1/4W
R280	1-216-069-00	RES-CHIP	6.8K	5%	1/10W
R281	1-208-798-11	METAL CHIP	4.7K	0.50%	1/10W
R282	1-208-790-11	METAL CHIP	2.2K	0.50%	1/10W
R283	1-216-689-11	RES-CHIP	39K	5%	1/10W
R300	1-216-295-91	SHORT			
R301	1-216-022-00	RES-CHIP	75	5%	1/10W
R303	1-216-073-00	RES-CHIP	10K	5%	1/10W
R304	1-247-807-31	CARBON	100	5%	1/4W
R305	1-216-295-91	SHORT			
R306	1-216-025-91	RES-CHIP	100	5%	1/10W
R307	1-216-071-00	RES-CHIP	8.2K	5%	1/10W
R308	1-216-022-00	RES-CHIP	75	5%	1/10W
R309	1-216-022-00	RES-CHIP	75	5%	1/10W
R310	1-249-417-11	CARBON	1K	5%	1/4W
R311	1-216-025-91	RES-CHIP	100	5%	1/10W
R312	1-249-417-11	CARBON	1K	5%	1/4W
R313	1-216-049-91	RES-CHIP	1K	5%	1/10W
R314	1-216-081-00	RES-CHIP (KV-27FS16 ONLY)	22K	5%	1/10W
R315	1-216-022-00	RES-CHIP	75	5%	1/10W
R316	1-216-067-00	RES-CHIP	5.6K	5%	1/10W

Downloaded from www.Manualslib.com manuals search engine

MAP

Note:

The components identified by shading and mark ⚠ are critical for safety. Replace only with part number specified.

Note:

Les composants identifies per un trame et une marque ⚠ sont critiques pour la securite. Ne les remplacer que par une piece portant le numero specifie.

REF.NO.	PART NO.	DESCRIPTION	REMARK		
R317	1-247-807-31	CARBON	100	5%	1/4W
R318	1-216-091-00	RES-CHIP	56K	5%	1/10W
R319	1-216-081-00	RES-CHIP	22K	5%	1/10W
R320	1-216-025-91	RES-CHIP	100	5%	1/10W
R321	1-216-043-91	RES-CHIP	560	5%	1/10W
R322	1-216-025-91	RES-CHIP	100	5%	1/10W
R323	1-216-025-91	RES-CHIP	100	5%	1/10W
R324	1-216-065-91	RES-CHIP	4.7K	5%	1/10W
R325	1-249-417-11	CARBON	1K	5%	1/4W
R326	1-208-806-11	METAL CHIP	10K	0.50%	1/10W
R327	1-216-025-91	RES-CHIP	100	5%	1/10W
R328	1-216-025-91	RES-CHIP	100	5%	1/10W
R329	1-216-025-91	RES-CHIP	100	5%	1/10W
R331	1-216-049-91	RES-CHIP	1K	5%	1/10W
R332	1-216-022-00	RES-CHIP	75	5%	1/10W
R333	1-216-067-00	RES-CHIP	5.6K	5%	1/10W
R334	1-216-025-91	RES-CHIP	100	5%	1/10W
R335	1-216-057-00	RES-CHIP	2.2K	5%	1/10W
R336	1-216-057-00	RES-CHIP	2.2K	5%	1/10W
R337	1-216-057-00	RES-CHIP	2.2K	5%	1/10W
R338	1-216-073-00	RES-CHIP	10K	5%	1/10W
R339	1-216-091-00	RES-CHIP	56K	5%	1/10W
R340	1-216-025-91	RES-CHIP	100	5%	1/10W
R341	1-216-089-91	RES-CHIP	47K	5%	1/10W
R342	1-216-049-91	RES-CHIP	1K	5%	1/10W
R343	1-216-097-91	RES-CHIP	100K	5%	1/10W
R344	1-216-295-91	SHORT			
R345	1-216-097-91	RES-CHIP	100K	5%	1/10W
R346	1-216-097-91	RES-CHIP	100K	5%	1/10W
R347	1-216-025-91	RES-CHIP	100	5%	1/10W
R349	1-216-025-91	RES-CHIP	100	5%	1/10W
R351	1-216-041-00	RES-CHIP	470	5%	1/10W
R352	1-247-807-31	CARBON	100	5%	1/4W
R353	1-247-807-31	CARBON	100	5%	1/4W
R354	1-216-025-91	RES-CHIP	100	5%	1/10W
R355	1-216-053-00	RES-CHIP	1.5K	5%	1/10W
R356	1-216-025-91	RES-CHIP	100	5%	1/10W
R357	1-216-022-00	RES-CHIP	75	5%	1/10W
R358	1-216-093-91	RES-CHIP	68K	5%	1/10W
R359	1-216-057-00	RES-CHIP	2.2K	5%	1/10W
R360	1-216-093-91	RES-CHIP	68K	5%	1/10W
R361	1-216-022-00	RES-CHIP	75	5%	1/10W
R362	1-216-035-00	RES-CHIP	270	5%	1/10W
R363	1-216-039-00	RES-CHIP	390	5%	1/10W
R364	1-216-025-91	RES-CHIP	100	5%	1/10W
R365	1-216-025-91	RES-CHIP	100	5%	1/10W
R366	1-216-053-00	RES-CHIP	1.5K	5%	1/10W
R367	1-216-057-00	RES-CHIP	2.2K	5%	1/10W
R368	1-216-043-91	RES-CHIP	560	5%	1/10W
R369	1-216-033-00	RES-CHIP	220	5%	1/10W
R370	1-249-429-11	CARBON	10K	5%	1/4W
R372	1-216-043-91	RES-CHIP	560	5%	1/10W
R373	1-216-025-91	RES-CHIP	100	5%	1/10W
R374	1-216-025-91	RES-CHIP	100	5%	1/10W
R375	1-216-053-00	RES-CHIP	1.5K	5%	1/10W
R376	1-216-022-00	RES-CHIP	75	5%	1/10W
R377	1-216-057-00	RES-CHIP	2.2K	5%	1/10W
R378	1-216-295-91	SHORT			
R379	1-216-049-91	RES-CHIP	1K	5%	1/10W
R382	1-216-295-91	SHORT			
R383	1-216-295-91	SHORT			
R384	1-216-295-91	SHORT			
R386	1-216-047-91	RES-CHIP	820	5%	1/10W
R387	1-216-025-91	RES-CHIP	100	5%	1/10W
R388	1-216-025-91	RES-CHIP	100	5%	1/10W
R389	1-216-049-91	RES-CHIP	1K	5%	1/10W
R392	1-216-067-00	RES-CHIP	5.6K	5%	1/10W
R394	1-216-043-91	RES-CHIP	560	5%	1/10W
R395	1-216-043-91	RES-CHIP	560	5%	1/10W
R396	1-247-807-31	CARBON	100	5%	1/4W
R398	1-216-091-00	RES-CHIP	56K	5%	1/10W
R399	1-216-109-00	RES-CHIP	330K	5%	1/10W
R434	1-216-065-91	RES-CHIP (KV-27FS16 ONLY)	4.7K	5%	1/10W
R435	1-216-065-91	RES-CHIP (KV-27FS16 ONLY)	4.7K	5%	1/10W

TUNER

TU150	⚠	8-598-501-00	TUNER, FSS BTF-FA402 (KV-27FS16 ONLY)

CRYSTAL

X001	1-767-487-11	VIBRATOR, CRYSTAL
X301	1-567-505-11	OSCILLATOR, CRYSTAL

P

* A-1190-367-A P MOUNTED PC BOARD (KV-27FS16)

CAPACITOR

C3301	1-163-031-11	CERAMIC CHIP	0.01µF		50V
C3302	1-163-031-11	CERAMIC CHIP	0.01µF		50V
C3303	1-104-664-11	ELECT	47µF	20%	16V
C3304	1-163-031-11	CERAMIC CHIP	0.01µF		50V
C3305	1-163-031-11	CERAMIC CHIP	0.01µF		50V
C3306	1-163-038-91	CERAMIC CHIP	0.1µF		25V

Downloaded from www.Manualslib.com manuals search engine

P

Note:

The components identified by shading and mark ⚠ are critical for safety. Replace only with part number specified.

Note:

Les composants identifies per un trame et une marque ⚠ sont critiques pour la securite. Ne les remplacer que par une piece portant le numero specifie.

REF.NO.	PART NO.	DESCRIPTION	REMARK		
C3308	1-164-005-11	CERAMIC CHIP	0.47µF		25V
C3309	1-163-034-00	CERAMIC CHIP	0.033µF		50V
C3310	1-164-222-11	CERAMIC CHIP	0.22µF		25V
C3311	1-163-233-11	CERAMIC CHIP	18PF	5%	50V
C3314	1-163-031-11	CERAMIC CHIP	0.01µF		50V
C3315	1-163-031-11	CERAMIC CHIP	0.01µF		50V
C3316	1-163-133-00	CERAMIC CHIP	470PF	5%	50V
C3317	1-163-133-00	CERAMIC CHIP	470PF	5%	50V
C3319	1-163-133-00	CERAMIC CHIP	470PF	5%	50V
C3320	1-164-005-11	CERAMIC CHIP	0.47µF		25V
C3321	1-163-009-11	CERAMIC CHIP	0.001µF	10%	50V
C3323	1-104-664-11	ELECT	47µF	20%	16V
C3324	1-163-031-11	CERAMIC CHIP	0.01µF		50V
C3325	1-163-031-11	CERAMIC CHIP	0.01µF		50V
C3326	1-104-664-11	ELECT	47µF	20%	16V
C3327	1-104-664-11	ELECT	47µF	20%	16V
C3328	1-104-664-11	ELECT	47µF	20%	16V
C3330	1-126-964-11	ELECT	10µF	20%	50V
C3331	1-163-009-11	CERAMIC CHIP	0.001µF	10%	50V
C3332	1-164-346-11	CERAMIC CHIP	1µF		16V
C3333	1-164-346-11	CERAMIC CHIP	1µF		16V
C3334	1-164-005-11	CERAMIC CHIP	0.47µF		25V
C3335	1-163-009-11	CERAMIC CHIP	0.001µF	10%	50V
C3336	1-163-031-11	CERAMIC CHIP	0.01µF		50V
C3339	1-163-005-11	CERAMIC CHIP	470PF	10%	50V
C3340	1-126-967-11	ELECT	47µF	20%	50V
C3341	1-164-222-11	CERAMIC CHIP	0.22µF		25V
C3342	1-163-037-11	CERAMIC CHIP	0.022µF	10%	50V
C3343	1-126-967-11	ELECT	47µF	20%	50V
C3344	1-164-222-11	CERAMIC CHIP	0.22µF		25V
C3345	1-164-346-11	CERAMIC CHIP	1µF		16V
C3346	1-164-346-11	CERAMIC CHIP	1µF		16V
C3347	1-164-346-11	CERAMIC CHIP	1µF		16V
C3349	1-164-005-11	CERAMIC CHIP	0.47µF		25V
C3350	1-163-233-11	CERAMIC CHIP	18PF	5%	50V
C3351	1-163-113-00	CERAMIC CHIP	68PF	5%	50V
C3352	1-164-222-11	CERAMIC CHIP	0.22µF		25V
C3353	1-126-967-11	ELECT	47µF	20%	50V
C3354	1-163-037-11	CERAMIC CHIP	0.022µF	10%	50V
C3355	1-164-346-11	CERAMIC CHIP	1µF		16V
C3356	1-164-346-11	CERAMIC CHIP	1µF		16V
C3357	1-164-346-11	CERAMIC CHIP	1µF		16V

CONNECTOR

CN3300	1-573-301-21	CONNECTOR, BOARD TO BOARD 20P			

DIODE

D3301	8-719-073-01	DIODE MA111-TX			
D3304	8-719-422-12	DIODE UDZ-TE-17-3.9B			

IC

IC3300	8-759-353-00	IC NJM2534M(TE2)			
IC3301	8-759-660-74	IC M65664FP-DS60S			
IC3302	8-759-458-18	IC TDA8501T			

COIL

L3300	1-414-267-11	INDUCTOR	10µH		
L3301	1-410-682-31	INDUCTOR	470µH		
L3302	1-414-267-11	INDUCTOR	10µH		
L3303	1-414-267-11	INDUCTOR	10µH		
L3304	1-414-267-11	INDUCTOR	10µH		

TRANSISTOR

Q3300	8-729-422-27	TRANSISTOR 2SD601A-QRS-TX			
Q3301	8-729-422-27	TRANSISTOR 2SD601A-QRS-TX			
Q3302	8-729-422-27	TRANSISTOR 2SD601A-QRS-TX			
Q3304	8-729-216-22	TRANSISTOR 2SB709A-QRS-TX			
Q3305	8-729-216-22	TRANSISTOR 2SB709A-QRS-TX			
Q3306	8-729-216-22	TRANSISTOR 2SB709A-QRS-TX			
Q3308	8-729-216-22	TRANSISTOR 2SB709A-QRS-TX			
Q3309	8-729-422-27	TRANSISTOR 2SD601A-QRS-TX			
Q3311	8-729-111-55	TRANSISTOR 2SD1292			
Q3312	8-729-216-22	TRANSISTOR 2SB709A-QRS-TX			
Q3313	8-729-422-27	TRANSISTOR 2SD601A-QRS-TX			
Q3314	8-729-422-27	TRANSISTOR 2SD601A-QRS-TX			
Q3315	8-729-216-22	TRANSISTOR 2SB709A-QRS-TX			
Q3316	8-729-216-22	TRANSISTOR 2SB709A-QRS-TX			
Q3317	8-729-422-27	TRANSISTOR 2SD601A-QRS-TX			
Q3318	8-729-422-27	TRANSISTOR 2SD601A-QRS-TX			
Q3319	8-729-422-27	TRANSISTOR 2SD601A-QRS-TX			
Q3320	8-729-422-27	TRANSISTOR 2SD601A-QRS-TX			
Q3321	8-729-216-22	TRANSISTOR 2SB709A-QRS-TX			
Q3323	8-729-422-27	TRANSISTOR 2SD601A-QRS-TX			

RESISTOR

R3300	1-216-041-00	RES-CHIP	470	5%	1/10W
R3303	1-216-073-00	RES-CHIP	10K	5%	1/10W
R3304	1-216-133-00	RES-CHIP	3.3M	5%	1/10W
R3305	1-216-037-00	RES-CHIP	330	5%	1/10W
R3308	1-216-085-00	RES-CHIP	33K	5%	1/10W
R3309	1-216-025-91	RES-CHIP	100	5%	1/10W
R3310	1-216-025-91	RES-CHIP	100	5%	1/10W

Downloaded from www.Manualslib.com manuals search engine

P VA

Note:

The components identified by shading and mark ⚠ are critical for safety. Replace only with part number specified.

Note:

Les composants identifies per un trame et une marque ⚠ sont critiques pour la securite. Ne les remplacer que par une piece portant le numero specifie.

REF.NO.	PART NO.	DESCRIPTION	REMARK		
R3311	1-216-037-00	RES-CHIP	330	5%	1/10W
R3312	1-216-043-91	RES-CHIP	560	5%	1/10W
R3313	1-216-035-00	RES-CHIP	270	5%	1/10W
R3316	1-216-295-91	SHORT			
R3317	1-216-295-91	SHORT			
R3318	1-216-061-00	RES-CHIP	3.3K	5%	1/10W
R3319	1-216-295-91	SHORT			
R3320	1-216-073-00	RES-CHIP	10K	5%	1/10W
R3321	1-216-049-91	RES-CHIP	1K	5%	1/10W
R3322	1-216-091-00	RES-CHIP	56K	5%	1/10W
R3323	1-216-049-91	RES-CHIP	1K	5%	1/10W
R3324	1-216-033-00	RES-CHIP	220	5%	1/10W
R3325	1-216-057-00	RES-CHIP	2.2K	5%	1/10W
R3328	1-216-295-91	SHORT			
R3329	1-216-033-00	RES-CHIP	220	5%	1/10W
R3333	1-216-049-91	RES-CHIP	1K	5%	1/10W
R3334	1-216-049-91	RES-CHIP	1K	5%	1/10W
R3335	1-216-049-91	RES-CHIP	1K	5%	1/10W
R3336	1-216-295-91	SHORT			
R3338	1-216-295-91	SHORT			
R3340	1-216-295-91	SHORT			
R3341	1-216-057-00	RES-CHIP	2.2K	5%	1/10W
R3342	1-216-295-91	SHORT			
R3343	1-216-065-91	RES-CHIP	4.7K	5%	1/10W
R3344	1-216-073-00	RES-CHIP	10K	5%	1/10W
R3345	1-216-073-00	RES-CHIP	10K	5%	1/10W
R3346	1-216-045-00	RES-CHIP	680	5%	1/10W
R3347	1-216-049-91	RES-CHIP	1K	5%	1/10W
R3349	1-215-857-11	METAL OXIDE	10	5%	1W
R3350	1-216-049-91	RES-CHIP	1K	5%	1/10W
R3351	1-216-041-00	RES-CHIP	470	5%	1/10W
R3355	1-216-049-91	RES-CHIP	1K	5%	1/10W
R3356	1-216-113-00	RES-CHIP	470K	5%	1/10W
R3357	1-216-041-00	RES-CHIP	470	5%	1/10W
R3358	1-216-689-11	RES-CHIP	39K	5%	1/10W
R3359	1-216-113-00	RES-CHIP	470K	5%	1/10W
R3360	1-216-051-00	RES-CHIP	1.2K	5%	1/10W
R3361	1-216-045-00	RES-CHIP	680	5%	1/10W
R3365	1-216-073-00	RES-CHIP	10K	5%	1/10W
R3366	1-216-049-91	RES-CHIP	1K	5%	1/10W
R3367	1-216-073-00	RES-CHIP	10K	5%	1/10W
R3368	1-216-049-91	RES-CHIP	1K	5%	1/10W
R3369	1-216-049-91	RES-CHIP	1K	5%	1/10W
R3370	1-216-049-91	RES-CHIP	1K	5%	1/10W
R3371	1-216-049-91	RES-CHIP	1K	5%	1/10W
R3372	1-216-049-91	RES-CHIP	1K	5%	1/10W
R3373	1-216-049-91	RES-CHIP	1K	5%	1/10W
R3374	1-216-025-91	RES-CHIP	100	5%	1/10W
R3375	1-216-025-91	RES-CHIP	100	5%	1/10W
R3376	1-216-025-91	RES-CHIP	100	5%	1/10W
R3377	1-216-041-00	RES-CHIP	470	5%	1/10W
R3378	1-216-049-91	RES-CHIP	1K	5%	1/10W
R3379	1-216-049-91	RES-CHIP	1K	5%	1/10W
R3380	1-216-043-91	RES-CHIP	560	5%	1/10W
R3381	1-216-041-00	RES-CHIP	470	5%	1/10W
R3382	1-216-043-91	RES-CHIP	560	5%	1/10W
R3383	1-216-041-00	RES-CHIP	470	5%	1/10W
R3384	1-216-045-00	RES-CHIP	680	5%	1/10W
R3385	1-216-043-91	RES-CHIP	560	5%	1/10W
R3386	1-216-041-00	RES-CHIP	470	5%	1/10W
R3387	1-216-049-91	RES-CHIP	1K	5%	1/10W
R3388	1-216-049-91	RES-CHIP	1K	5%	1/10W
R3392	1-208-834-11	METAL CHIP	150K	0.5%	1/10W
R3393	1-216-295-91	SHORT			
R3395	1-216-689-11	RES-CHIP	39K	5%	1/10W
R3396	1-216-081-00	RES-CHIP	22K	5%	1/10W
R3397	1-216-025-91	RES-CHIP	100	5%	1/10W
R3398	1-216-047-91	RES-CHIP	820	5%	1/10W
R3399	1-216-045-00	RES-CHIP	680	5%	1/10W
R3400	1-216-089-91	RES-CHIP	47K	5%	1/10W
R3401	1-216-089-91	RES-CHIP	47K	5%	1/10W
R3402	1-216-081-00	RES-CHIP	22K	5%	1/10W
R3403	1-216-089-91	RES-CHIP	47K	5%	1/10W
R3404	1-216-081-00	RES-CHIP	22K	5%	1/10W
R3405	1-216-089-91	RES-CHIP	47K	5%	1/10W

CRYSTAL

X3300	1-567-505-11	OSCILLATOR, CRYSTAL
X3301	1-781-377-11	VIBRATOR, CRYSTAL

VA

*	A-1342-550-A	VA (VAR) MOUNTED PC BOARD
	4-382-854-11	SCREW (M3X10), P, SW (+)

CAPACITOR

C805	1-129-763-00	FILM	0.033µF	5%	200V
C811	1-129-765-00	FILM	0.047µF	5%	200V
C901	1-107-667-11	ELECT	2.2µF	20%	160V
C902	1-130-491-00	MYLAR	0.047µF	5%	50V
C903	1-126-925-11	ELECT	470µF	20%	10V
C904	1-130-471-00	MYLAR	0.001µF	5%	50V
C905	1-106-383-00	MYLAR	0.047µF	10%	200V
C906	1-130-471-00	MYLAR	0.001µF	5%	50V
C907	1-107-638-11	ELECT	33µF	20%	160V

Downloaded from www.Manualslib.com manuals search engine

VA

Note:

The components identified by shading and mark ⚠ are critical for safety. Replace only with part number specified.

Note:

Les composants identifies per un trame et une marque ⚠ sont critiques pour la securite. Ne les remplacer que par une piece portant le numero specifie.

REF.NO.	PART NO.	DESCRIPTION	REMARK		
C908	1-126-925-11	ELECT	470µF	20%	10V
C909	1-161-830-00	CERAMIC	0.0047µF		500V
C910	1-104-999-11	MYLAR	0.1µF	10%	200V
C911	1-104-665-11	ELECT	100µF	20%	10V
C912	1-126-941-11	ELECT	470µF	20%	25V
C913	1-102-074-00	CERAMIC	0.001µF	10%	50V
C914	1-130-491-00	MYLAR	0.047µF	5%	50V

CONNECTOR

CN901 *	1-564-508-11	PLUG, CONNECTOR 5P
CN902 *	1-770-723-11	CONNECTOR, BOARD TO BOARD 8P
CN904 *	1-564-507-11	PLUG, CONNECTOR 4P

DIODE

D804	8-719-302-43	DIODE RGP10GPKG23
D805	8-719-991-33	DIODE 1SS133T-77
D806	8-719-991-33	DIODE 1SS133T-77
D807	8-719-210-21	DIODE ERA82-004TP5
D901	8-719-110-88	DIODE MTZJ-T-77-39
D902	8-719-110-88	DIODE MTZJ-T-77-39
D903	8-719-991-33	DIODE 1SS133T-77

COIL

L801	1-406-989-21	INDUCTOR	10mH
L802	1-459-111-00	INDUCTOR	10mH
L901	1-412-528-11	INDUCTOR	18µH

TRANSISTOR

Q807	8-729-931-45	TRANSISTOR IRF614
Q808	8-729-140-97	TRANSISTOR 2SB734-T-34
Q901	8-729-017-06	TRANSISTOR 2SC4793
Q902	8-729-017-05	TRANSISTOR 2SA1837
Q903	8-729-423-33	TRANSISTOR 2SC3311A-QRSTA
Q904	8-729-423-33	TRANSISTOR 2SC3311A-QRSTA
Q905	8-729-119-76	TRANSISTOR 2SA1309A-QRSTA
Q906	8-729-423-33	TRANSISTOR 2SC3311A-QRSTA

RESISTOR

REF.NO.	PART NO.	DESCRIPTION	REMARK		
R818	1-216-025-91	RES-CHIP	100	5%	1/10W
R826	1-249-421-11	CARBON	2.2K	5%	1/4W
R876	1-216-049-91	RES-CHIP	1K	5%	1/10W
R901	1-249-401-11	CARBON	47	5%	1/4W
R902	1-249-386-11	CARBON	2.7	5%	1/4W
R903	1-249-414-11	CARBON	560	5%	1/4W
R904	1-249-432-11	CARBON	18K	5%	1/4W
R905	1-249-417-11	CARBON	1K	5%	1/4W
R906	1-249-432-11	CARBON	18K	5%	1/4W
R907	1-249-386-11	CARBON	2.7	5%	1/4W
R908	1-249-414-11	CARBON	560	5%	1/4W
R909	1-260-312-11	CARBON	47	5%	1/2W
R910	1-216-476-11	METAL OXIDE	180	5%	3W
R911	1-249-403-11	CARBON	68	5%	1/4W
R912	1-247-815-91	CARBON	220	5%	1/4W
R913	1-249-403-11	CARBON	68	5%	1/4W
R914	1-249-410-11	CARBON	270	5%	1/4W
R915	1-249-417-11	CARBON	1K	5%	1/4W
R916	1-249-417-11	CARBON	1K	5%	1/4W
R917	1-249-417-11	CARBON	1K	5%	1/4W
R918	1-247-807-31	CARBON	100	5%	1/4W
R919	1-247-807-31	CARBON	100	5%	1/4W
R920	1-249-416-11	CARBON	820	5%	1/4W
R921	1-249-429-11	CARBON	10K	5%	1/4W
R922	1-249-397-11	CARBON	22	5%	1/4W
R923	1-249-401-11	CARBON	47	5%	1/4W

ACCESSORIES AND PACKAGING

*	4-392-859-01	BAG, PROTECTION
*	4-074-568-01	CARTON, INDIVIDUAL (KV-27FS12/27FS16 ONLY)
*	4-075-478-01	CARTON, INDIVIDUAL (KV-29FS12 ONLY)
*	4-074-565-01	CUSHION ASSY, REAR (UPPER)
*	4-074-566-01	CUSHION ASSY, FRONT (UPPER)
*	4-074-567-01	CUSHION ASSY, LOWER
	4-075-499-21	MANUAL, INSTRUCTION (KV-27FS12/27FS16 ONLY)
	4-075-499-41	MANUAL, INSTRUCTION (KV-29FS12/29FS12C ONLY)

REMOTE COMMANDER

1-418-387-11	REMOTE COMMANDER (RM-Y168) (ALL EXCEPT KV-27FS16)
4-978-977-01	BATTERY COVER FOR RM-Y168
1-418-384-11	REMOTE COMMANDER (RM-Y169) (KV-27FS16 ONLY)
4-978-977-01	BATTERY COVER FOR RM-Y169

Downloaded from www.Manualslib.com manuals search engine

NOTES:

Downloaded from www.Manualslib.com manuals search engine

NOTES:

Downloaded from www.Manualslib.com manuals search engine

9-965-882-04

Sony Corporation
Sony Technology Center
Product Quality Division
Service Promotion Dept.

English
2000DS74325-1
Printed in USA
2000.4

Downloaded from www.Manualslib.com manuals search engine

HISTORY INFORMATION FOR THE FOLLOWING MANUAL:

SERVICE MANUAL BA-5 CHASSIS

MODEL NAME	REMOTE COMMANDER	DESTINATION	CHASSIS NO.
KV-27FS12	RM-Y168	US	SCC-S40D-A
KV-27FS12	RM-Y168	CND	SCC-S41D-A
KV-27FS16	RM-Y169	US	SCC-S40E-A
KV-29FS12	RM-Y168	E	SCC-S38K-A
KV-29FS12C	RM-Y168	E	SCC-S38L-A

ORIGINAL MANUAL ISSUE DATE: 5/2001

ALL REVISIONS AND UPDATES TO THE ORIGINAL MANUAL ARE APPENDED TO THE END OF THE PDF FILE.

REVISION DATE	REVISION TYPE	SUBJECT
5/2001	No revisions or updates are applicable at this time.	
6/2001	CORRECTION-1	New Block Diagram
8/2001	CORRECTION-2	Tuner P/N Change
10/2002	CORRECTION-3	New 2 Pin THP601

TRINITRON ® COLOR TELEVISION

SONY®

9-965-882-04

Downloaded from www.Manualslib.com manuals search engine

SERVICE MANUAL

BA-5 CHASSIS

Self Diagnosis Supported model

MODEL	COMMANDER	DEST	CHASSIS NO.
KV-27FS12	RM-Y168	US	SCC-S40D-A
KV-27FS12	RM-Y168	CND	SCC-S41D-A
KV-27FS16	RM-Y169	US	SCC-S40E-A
KV-29FS12	RM-Y168	E	SCC-S38K-A
KV-29FS12C	RM-Y168	E	SCC-S38L-A

CORRECTION-1

Subject: New Block Diagrams

Correct the service manual as shown below.
File this correction with the service manual.

Section 6: Block Diagrams (Page 31-34)
Size of Block Diagrams increased and replaced.

TRINITRON® COLOR TV

SONY®

Downloaded from www.Manualslib.com manuals search engine

SECTION 6
DIAGRAMS

6.1 BLOCK DIAGRAM (1/2)

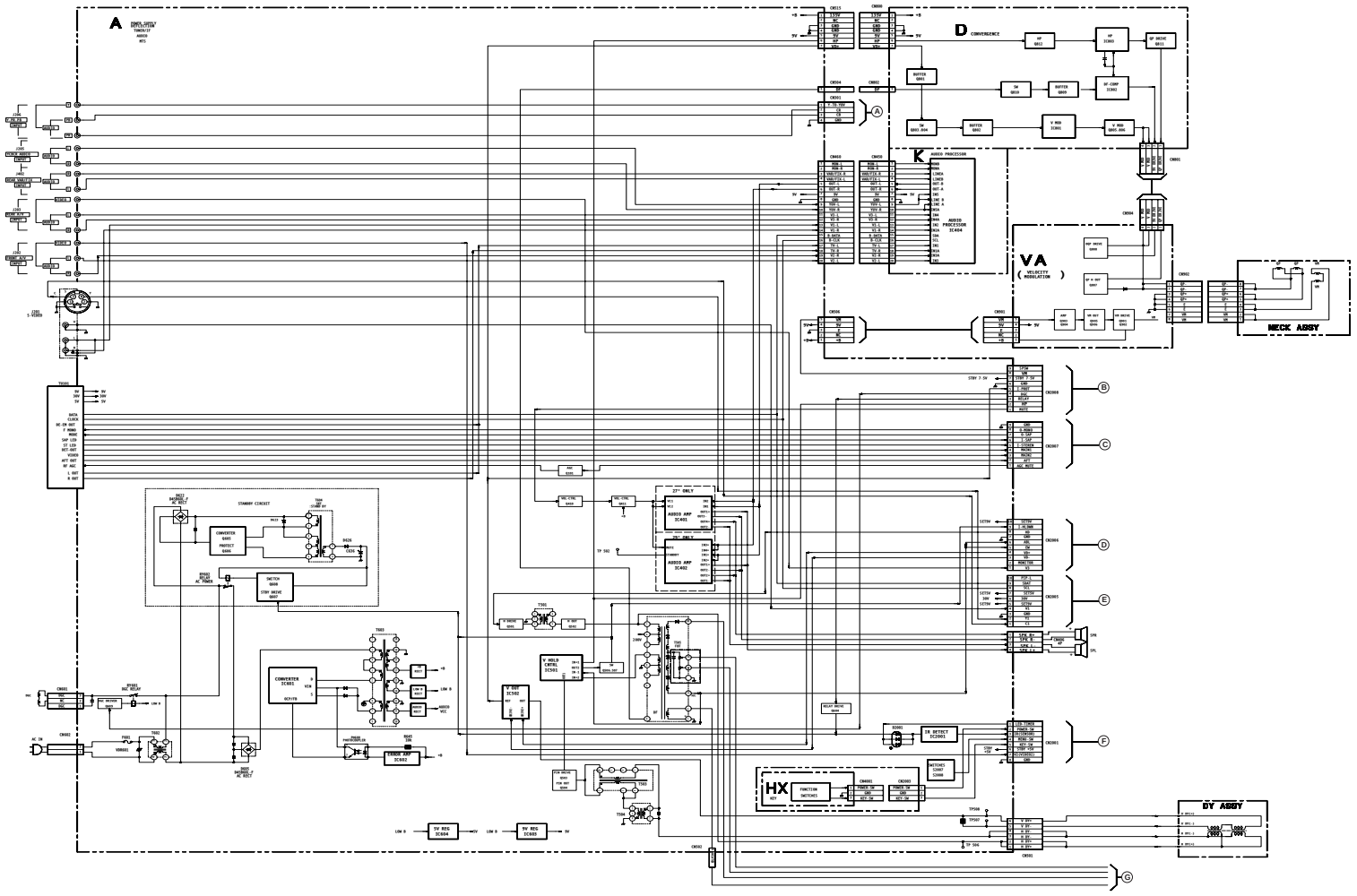

— 1 — — 2 — — 3 —

Downloaded from www.Manualslib.com manuals search engine

6.1 BLOCK DIAGRAM (2/2)

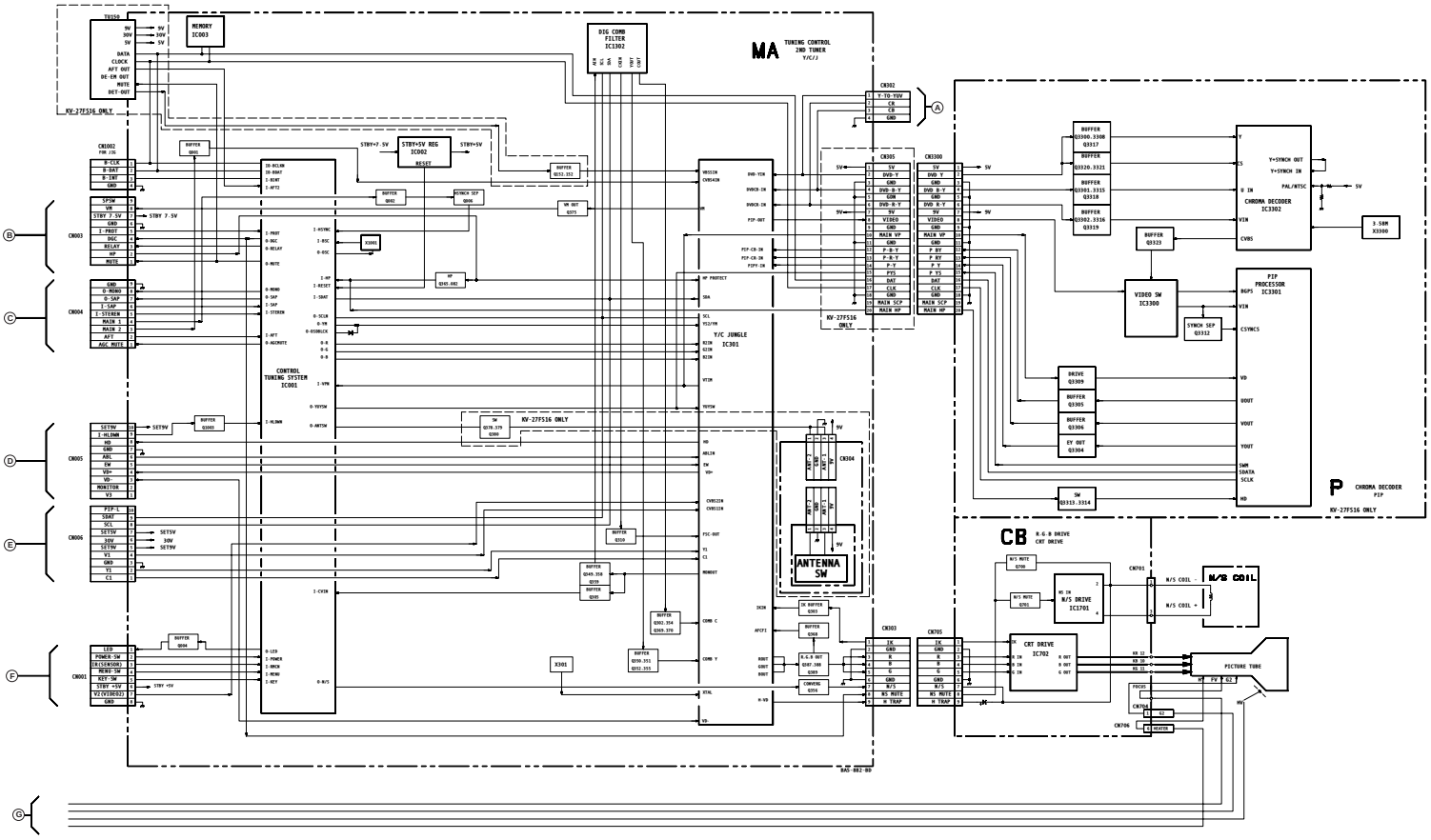

Downloaded from www.Manualslib.com manuals search engine

9-965-882-91

Sony Corporation
Sony Technology Center
Product Quality Division
Service Promotion Department

English
2000FJ74325-1
Printed in U.S.A.
©2000.6

Downloaded from www.Manualslib.com manuals search engine

Self Diagnosis Supported model

SERVICE MANUAL BA-5 CHASSIS

MODEL NAME	REMOTE COMMANDER	DESTINATION	CHASSIS NO.
KV-27FS12	RM-Y168	US	SCC-S40D-A
KV-27FS12	RM-Y168	CND	SCC-S41D-A
KV-27FS16	RM-Y169	US	SCC-S40E-A
KV-29FS12	RM-Y168	E	SCC-S38K-A
KV-29FS12C	RM-Y168	E	SCC-S38L-A

CORRECTION - 2

Subject: Tuner P/N Change

Correct the service manual as shown below.
File this correction with the service manual.

Section 7: Exploded Views (Page 59)

7-2. CHASSIS (KV-27FS12/27FS16 ONLY)

☛ :Modified Item

Incorrect

REF. NO.	PART NO.	DESCRIPTION	REMARK
38 ⚠	8-598-431-30	TUNER, FSS BTF-WA411	

Correct

REF. NO.	PART NO.	DESCRIPTION	REMARK
38 ⚠	8-598-542-20	TUNER, FSS BTF-WA412	

Section 8: Electrical Parts List (Page 66)

TU101 ⚠	8-598-431-30	TUNER, FSS BTF-WA411	

TU101 ⚠	8-598-542-20	TUNER, FSS BTF-WA412	

TRINITRON ® COLOR TV

SONY®

Sony Corporation
Sony Technology Center
Technical Services
Service Promotion Department

English
2001HJ74325-1
Printed in USA
© 2001.8

9-965-882-92

Downloaded from www.Manualslib.com manuals search engine

Self Diagnosis Supported model

SERVICE MANUAL

BA-5 CHASSIS

MODEL NAME	REMOTE COMMANDER	DESTINATION	CHASSIS NO.
KV-27FS12	RM-Y168	US	SCC-S40D-A
KV-27FS12	RM-Y168	CND	SCC-S41D-A
KV-27FS16	RM-Y169	US	SCC-S40E-A
KV-29FS12	RM-Y168	E	SCC-S38K-A
KV-29FS12C	RM-Y168	E	SCC-S38L-A

CORRECTION - 3

SUBJECT: NEW 2 PIN THP601

Correct the service manual as shown.
File this Correction with the service manual.

SECTION 6: DIAGRAMS
6-3.A Board Schematic Diagram (Page 39)

SECTION 8: ELECTRICAL PARTS LIST (Page 66)

TRINITRON® COLOR TELEVISION

SONY®

9-965-882-93

Downloaded from www.Manualslib.com manuals search engine

☛ : Corrected Item

SECTION 6: DIAGRAMS

6-3.A Board Schematic Diagram (Page 39)

If a set requires a 3 pin (THP601) thermistor it may still be ordered using the existing part number. If a set requires a 2 pin (THP601) thermistor the new part number must be used.

For 3 Pin Configuration

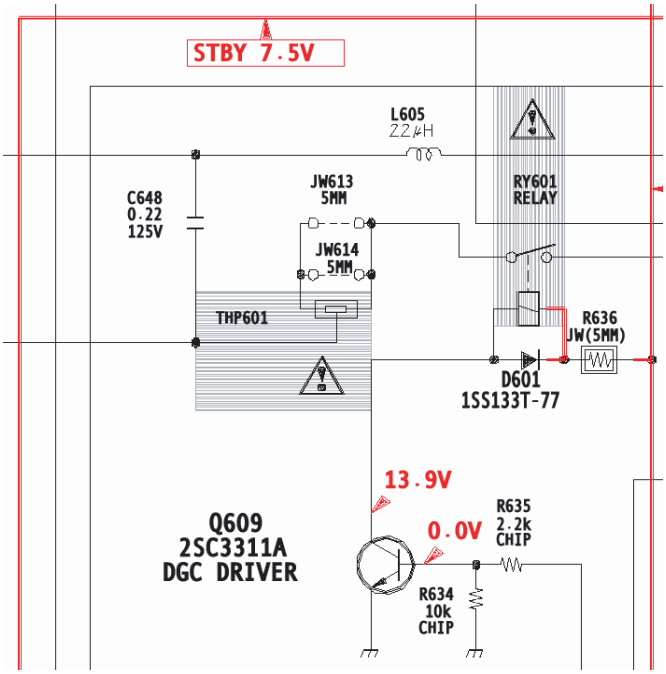

For 2 Pin Configuration

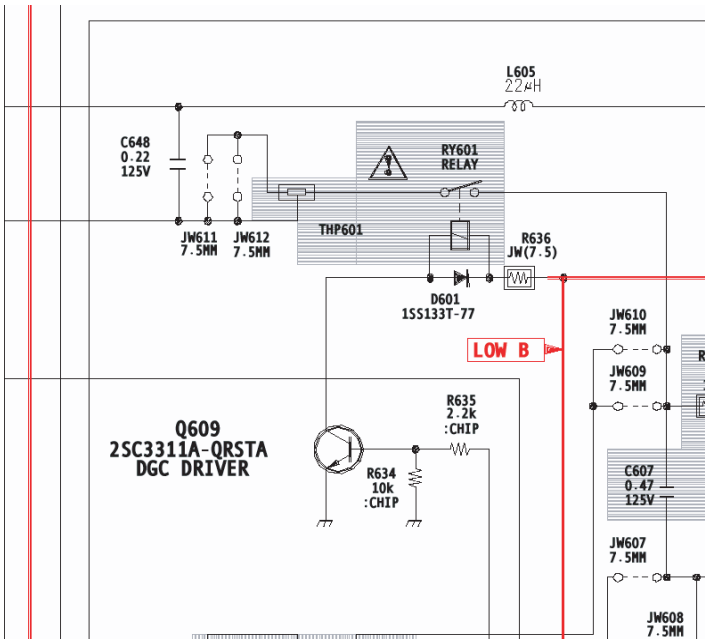

SECTION 8: ELECTRICAL PARTS LIST (Page 66)

OLD

REF. NO.	PART NO.	DESCRIPTION
⚠ THP601	1-803-540-11	THERMISTOR

NEW

REF. NO.	PART NO.	DESCRIPTION
⚠ THP601	1-803-540-11	THERMISTOR (3 PIN)
⚠ THP601	1-804-313-11	THERMISTOR (2 PIN)

9-965-882-93

Sony Corporation
Sony Technology Center
Technical Services
Services Promotion Dept.

English
2002JJ74WEB-1
Printed in USA
2002.10

Downloaded from www.Manualslib.com manuals search engine